NXP TDA9351/53/61/63 XXX SERIES

SERVICE MANUAL

COLOUR TELEVISION

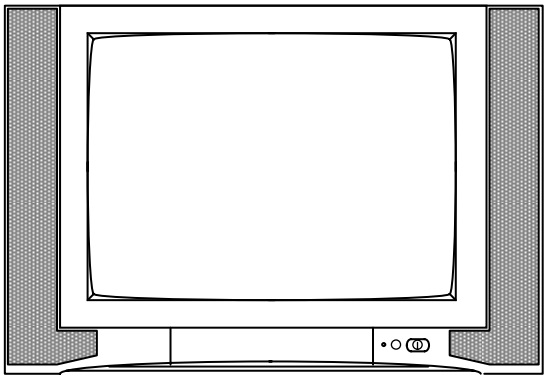

CONTENTS

1. safety precautions ……3

2. block diagram ……4

3. Replacement of memory IC ……6

4. Service adjustment ……..6

5. ICs functional description ……15

6. Test point waveform……18

7. All ICs/transistors voltages……19

8. Purity / convergence adjustment……..20

9. KLX-PH22Z VER3.0 circuit diagram ……22

10. KLX-PH22Z VER3.0 PCB …….. 23

11. KLX-PH22Z .BOM …….. 24

SAFETY PRECAUTIONS

1. The design of this product contains special hardware, many circuits and components specially for safety purposes. For continued protection, no changes should be made to the original design unless authorized in writing by the manufacturer. Replacement parts must be identical to those used in the original circuits. Service should be performed by qualified personnel only.

2. Alterations of the design or circuitry of the products should not be made. Any design alterations or additions will void the manufacturer's warranty and will further relieve the manufacturer of responsibility for personal injury or property damage resulting therefrom.

3. Many electrical and mechanical parts in the products have special safety-related characteristics. These characteristics are often not evident from visual inspection nor can the protection afforded by them necessarily be obtained by using replacement components rated for higher voltage, wattage, etc. Replacement parts which have these special safety characteristics are identified in the parts list of Service manual. **Electrical components having such features are identified by shading on the schematics and by (!) on the parts list in Service manual.** The use of a substitute replacement which does not have the same safety characteristics as the recommended replacement part shown in the parts list of Service manual may cause shock, fire, or other hazards

4. **Don't short between the LIVE side ground and ISOLATED (NEUTRAL) side ground or EARTH side ground when repairing.** Some model's power circuit is partly different in the GND. The difference of the GND is shown by the LIVE: ( ) side GND, ISOLATED (NEUTRAL) : ( ) side GND and EARTH : ( ) side GND. Don't short between the LIVE side GND and ISOLATED (NEUTRAL) side GND or EARTH side GND and never measure with a measuring apparatus (oscilloscope etc.) the LIVE side GND and ISOLATED (NEUTRAL) side GND or EARTH side GND at the same time. If above note will not be kept, a fuse or any parts will be broken.

5. If any repair has been made to the chassis, it is recommended that the +B setting should be checked or adjusted (See ADJUSTMENT OF +B POWER SUPPLY).

6. The high voltage applied to the picture tube must conform with that specified in Service manual. Excessive high voltage can cause an increase in X-Ray emission, arcing and possible component damage, therefore operation under excessive high voltage conditions should be kept to a minimum, or should be prevented. If severe arcing occurs, remove the AC power immediately and determine the cause by visual inspection (incorrect installation, cracked or melted high voltage harness, poor soldering, etc.). To maintain the proper minimum level of soft X-Ray emission, components in the high voltage circuitry including the picture tube must be the exact replacements or alternatives approved by the manufacturer of the complete product.

7. Do not check high voltage by drawing an arc. Use a high voltage meter or a high voltage probe with a VTVM. Discharge the picture tube before attempting meter connection, by connecting a clip lead to the ground frame and connecting the other end of the lead through a 10kΩ 2W resitor to the anode button.

8. When service is required, observe the original lead dress. Extra precaution should be given to assure correct lead dress in the high voltage circuit area. Where a short circuit has occurred, those components that indicate evidence of overheating should be replaced. Always use the
9. manufacturer's replacement components.

10. **Isolation Check**
(Safety for Electrical Shock Hazard)
After re-assembling the product, always perform an isolation check on the exposed metal parts of the cabinet (antenna terminals, video/audio input and output terminals, Control knobs, metal cabinet, screwheads, earphone jack, control shafts, etc.) to be sure the product is safe to operate without danger of electrical shock.

11. The surface of the TV screen is coated with a thin film which can easily be damaged. Be very careful with it when handle the TV. Should the TV screen become soiled, wipe it with a soft dry cloth. Never rub it forcefully. Never use any cleaner or detergent on it.

(1) Dielectric Strength Test
The isolation between the AC primary circuit and all metal parts exposed to the user, particularly any exposed metal part having a return path to the chassis should withstand a voltage of 3000V AC (r.m.s.) for a period of one second.
(…Withstand a voltage of 1100V AC (r.m.s.) to an appliance rated up to 120V, and 3000V AC (r.m.s.) to an appliance rated 200V or more, for a periode of one second.)
This method of test requires a test equipment not generally found in the service trade.

(2) Leakage Current Check
Plug the AC line cord directly into the AC outlet (do not use a line isolation transformer during this check.). Using a "Leakage Current Tester", measure the leakage current from each exposed metal part of the cabinet, particularly any exposed metal part having a return path to the chassis, to a known good earth ground (water pipe, etc.). Any leakage current must not exceed 0.5mA AC (r.m.s.).
However, in tropical area, this must not exceed 0.2mA AC (r.m.s.).

●Alternate Check Method
Plug the AC line cord directly into the AC outlet (do not use a line isolation transformer during this check.). Use an AC voltmeter having 1000 ohms per volt or more sensitivity in the following manner. Connect a 1500 Ω 10W resistor paralleled by a 0.15 μF AC-type capacitor between an exposed metal part and a known good earth ground (water pipe, etc.). Measure the AC voltage across the resistor with the AC voltmeter. Move the resistor connection to each exposed metal part, particularly any exposed metal part having a return path to the chassis, and measure the AC voltage across the resistor. Now, reverse the plug in the AC outlet and repeat each measurement. Any voltage measured must not exceed 0.75V AC (r.m.s.). This corresponds to 0.5mA AC (r.m.s.).
However, in tropical area, this must not exceed 0.3V AC (r.m.s.).
This corresponds to 0.2mA AC (r.m.s.)

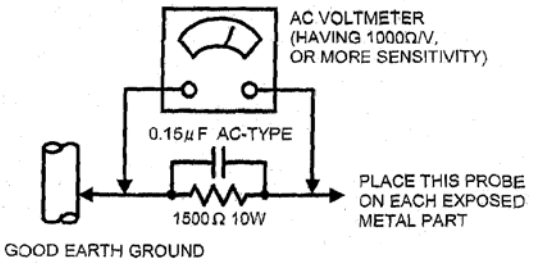

2 TV Block diagram

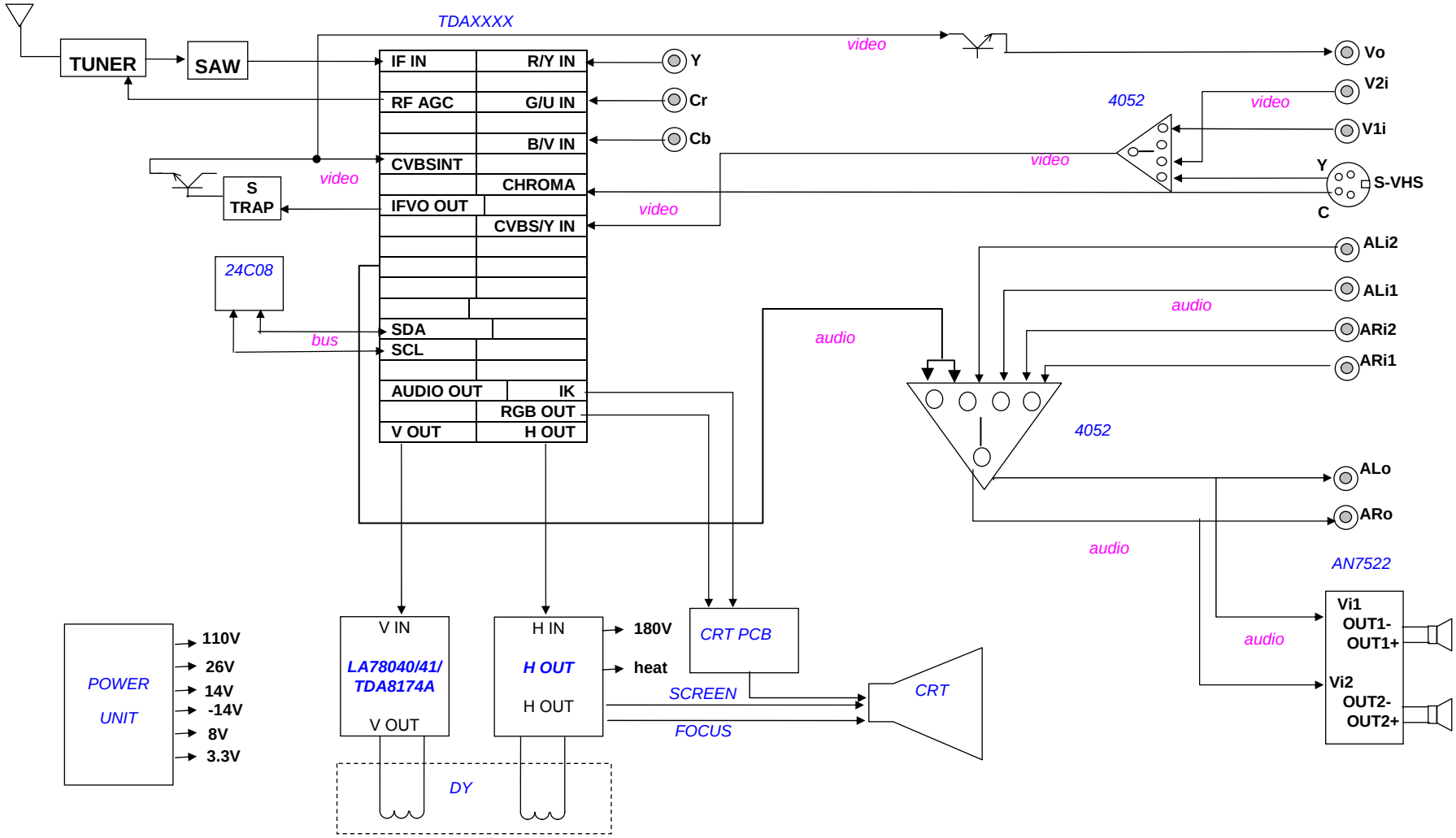

Block diagram TDA93xx/83xx series with mono intercarrier sound demodulator

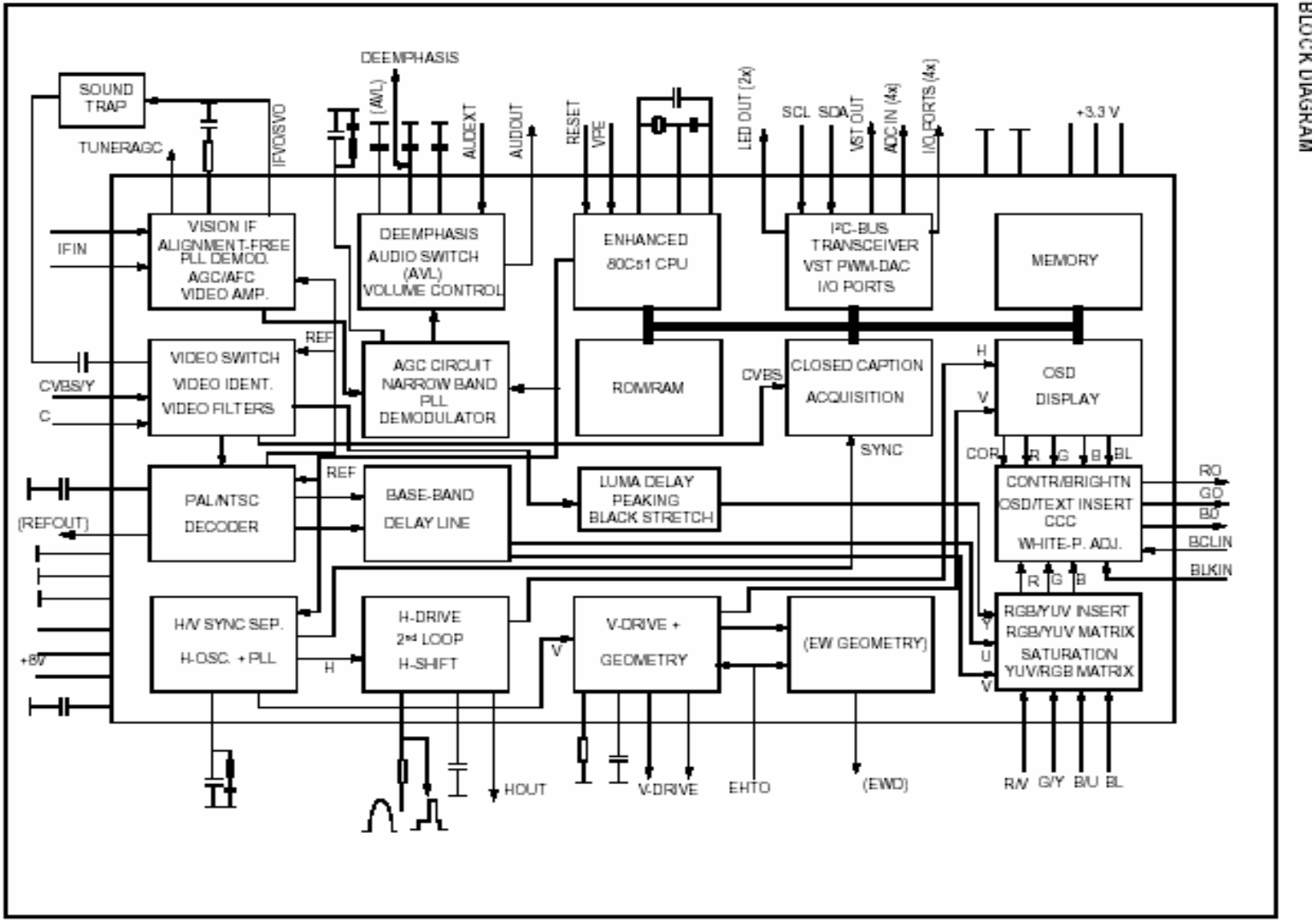

3.REPLACEMENT OF MEMORY IC

1. MEMORY IC.

   This TV uses memory IC. In the memory IC are memorized data for correctly operating the video and deflection circuits.

   When replacing memory IC, be sure to use IC written with the initial value of data.

2. PROCEDURE FOR REPLACING MEMORY IC

   (1) Power off

   Switch the power off and unplug the power cord from AC outlet.

   (2) Replace IC

   Be sure to use memory IC written with the initial data values.

   (3) Power On

   Plug the power cord into the AC outlet and switch the power On.

   (4) Check and set system default value:

   1) Press “MENU” key followed by digits '6"4"8' and '3'. then Press “TEST” key on the Remote control unit for factory used.
   2) The red “M”or”factory” will be displayed on the screen, repeat this and it will changed as follow: normal-M(factory)-BUS open-normal..
   3) Press digital key, (Mkey) and corresponding on-screen display will be appeared.
   4) Check the setting value of the SYSTEM default value of Table below. If the value is different, select items by [CH+]/[CH-] keys and set value by [VOL+]/[VOL-] keys.
   5) Press “STANDBY” key again and return to the normal screen.

4.SERVICE ADJUSTMENT

B1 POWER SUPPLY

1. Receive normal colour bar signal.
2. Connect DC voltmeter to VD524- and isolated ground.
3. Adjust potentiometer in power unit to get the voltage as 110V ±1.0V for 21 inch hereinafter,

FOCUS ADJUSTMENT

1. Receive a crosshatch signal.
2. While watching the screen, adjust the FOCUS VR to make the vertical and horizontal lines as fine and sharp as possible.

BUS CONTROL ADJUSTMENT

TDA9351/9353:to enter BUS control mode, Press “MENU” key followed by digits '6"4"8' and '3'. then press digit Press “0” to “9“ key, (Mkey) and corresponding on-screen display will be appeared.

TDA8370:to enter BUS control mode, Press “MENU” key followed by digits '6"4"8' and '3'. then Press “TEST” key on the Remote control unit twice for factory used(or press digits '6"4"8' and '3' twice.). and then press digit Press “0” to “9“ key, (Mkey) and corresponding on-screen display will be appeared.

On TV screen “TEST” will be indicated, this means entered bus control mode.

And press following key, each function will be available.

Remote Hand Unit keys

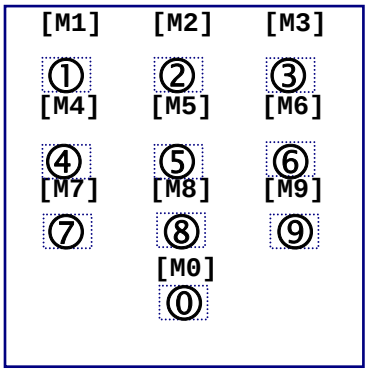

MENU8	
V SLOPE	31
V SHIFT	31
V AMP	31
V SCOR	31
H SHIFT	31

Geometrical adjustment

MENU8 (9351)/servise 1(8370)

Receive PAL standard Complete pattern signal.

Adjustment steps：

a) Adjust V. SLOPE, to the center horizontal line just appeare from half bottom shadow.

b) Adjust V. SIZE, to get 90% of vertical picture contents would be displayed on CRT.

c) Adjust V. SHIFT, the center horizontal line correspond to CRT vertical center.

d) Adjust H.SHIFT, to get the picture horizontal center correspond to CRT horizontal center.

Receive NTSC signal and repeat above

AGC Adjustment.

MENU7 (9351)/servise 2(8370)

Receive 60dBμ(1mV)V_H colour bar pattern signal, adjust AGC value（voltage from high to low）, to noise reduce gradually and just disappeared point.

CRTcut off and white balance adjustment.

MENU9 (9351)/B W BALANCE(8370)

Receive white signal.

a) CRT cut off adjustment.
   1. Select “SC”, then automatically vertical scan will be stopped.
   2. Adjust SCREEN control on Flyback transformer to get the darkest single horizontal line (red, green, or blue, sometimes shows more yellow, more purple or more white).

b) White balance adjustment.
   1. Select RD/BD menu.
   2. Adjust RD/BD to get colour temperature as x=281, y=311

c) Sub-Brightness adjustment. (Use stair case signal)
   1. Select SB menu.
   2. Adjust SB to get the darkest step being cutoff.

ICs Default Settings

1. TDA9351/9353

MI	Items	Variable	Preset	discription
M0	AVL	ON/OFF	ON	Auto volume control select on menu.on:open;off:close.
	FSL	ON/OFF	ON	Vertical sync slice level select.off:auto;on: 60% of complex sync
	FMWS	0-2	0	FM demodulation band width.0:standard(225khz);1: for over FM modulation(450KHz);2:for over FM modulation(600KHz)
	FFI	ON/OFF	OFF	IF PLL filter.on:short time constant;off:normal
	OSO	ON/OFF	ON	Decreasing bright spot when switch off stay at the vertical over scan period .ON:open;OFF:close.
	FCO	ON/OFF	OFF	Forced color system. On:only for single color system(for example VCR); off:normal
	WOOFER	ON/OFF	OFF	Woofer select on menu.on:open;off:close.
	DVD DELAY	0-8	2	Delay of turning to TV from DVD
	DVD/VCD	ON/OFF	OFF	Display on screen.on:DVD;OFF:VCD.
M1	BAND	0~2	2	Tuner band mode select,see attached table 1
	AV OPT	ON/OFF	OFF	AV control logic option,see table 2
	AV CFG*	0~8	3	AV input stuts select, see table 2
	NTSC MX	USA/JAP	USA	NTSC matrix select(USA or JAPAN)
	VIDEO OUT	IF/CVBS	CVBS	AV output mode select:TV /display on screen
	PRO	0-3	0	Sharp the boardline
	PIN5		NTSC	Compatible with other hardware, see table3
	PIN7		VOL1	Compatible with other hardware, see table3
	PIN8		MUTE	Compatible with other hardware, see table3
	START TIME	6-15 S	8	Delay time after power on
M2	VISION IF	38/38.9/45.75/58.75	38.9M	IF select
	DK	ON/OFF	OFF	Sound system select
	BG	ON/OFF	ON	Sound system select
	I	ON/OFF	OFF	Sound system select
	M	ON/OFF	OFF	Sound system select
	SIF PREFER	DK/I/BG/M	BG	Sound system priority select when Auto scan
	AUTO SOUND	ON/OFF	ON	Sound system auto identify when auo scan
	POWER OPT	0-2	2	Switch on mode,0:standby,1:power on;2:remember last time.
	TXT DEF	0-3	0	Text language selset
	TXT BRI	0-63	63	Text brightness set
	SPANISH BIT	ON/OFF	OFF	Spanish text bit
MI				
M3	ENGLISH	ON/OFF	ON	Language option
	ARABIC	ON/OFF	OFF	Language option

	PERSIAN	ON/OFF	OFF	Language option
	TURKISH	ON/OFF	OFF	Language option
	FRANCE	ON/OFF	OFF	Language option
	RUSSIA	ON/OFF	OFF	Language option
	HUNGARY	ON/OFF	ON	Language option
	SPANISH	ON/OFF	ON	Language option
	CROATIA	ON/OFF	ON	Language option
	GREECE	ON/OFF	ON	Language option
	PORTUGUESE	ON/OFF	ON	Language option
	BUGIARIA	ON/OFF	ON	Language option
	SERBIA	ON/OFF	ON	Language option
	ITALY	ON/OFF	ON	Language option
	ROMANIAN	ON/OFF	ON	Language option
	POLISH	ON/OFF	ON	Language option

	Items	Variable	Preset	
M4	SUBCON	0~63	63	Subsidiary contrast setting
	SUBCOL	0~63	63	Subsidiary color setting
	SUBSHP	0~63	63	Subsidiary sharp setting
	SUBTINT	0~15	15	Subsidiary tint setting
	YDLY PAL	0~15	12	Y delay time setting of PAL
	YDLY NTSC	0~15	12	Y delay time setting of NTSC
	YDLY SEC	0~15	12	Y delay time setting of SECAM
	YDLY AV	0~15	12	Y delay time setting of AV
	UOC VOL SW	ON/OFF	OFF	Audio output mode option.on:output controlled by volume;off:not controlled.
	UOC VOL	0-63	63	Audio output range setting of pin44
	TDA9874 GAIN	0-30	5	Output range adjusting of TDA9874
	CATHODE	0~15	15	Cathode voltage setting
	SC BRI	0~63	32	The single horizontal line brightness setting
	TINT RANGE	0-63	31	Tint adjust range setting
M5	OSD VPOS	0~63	53	OSD position setting of vertical
	OSD HPOS	0~59	15	OSD position setting of horizontal
	WIDE	0~63	15	Vertical range setting of wide screen mode
	ZOOM	0~63	59	Vertical range setting of zoom mode
	NENU TITLE	0~6	3	Color setting of menu title
MI	HALFTONE	0-2	1	Halftone setting of menu
M6	SHIPMODE			Ship mode setting option

	SEARCH SPEED	0-3	1	Search speed setting.o:slow;3:fast	
	PWL	0-15	15	White peak limit	
	OSD CONTRAST	0-3	0	OSD contrast setting.0:bitght;3:dark	
	BLUE STR.	ON/OFF	ON	Blue level stretch option	
	BSD	ON/OFF	ON	Black level stretch range.ON:30 IRE;OFF:20IRE.	
	AAS	ON/OFF	ON	Black level actived area.ON:no more than 10%of black background;OFF:no more than 20% of black background.	
	CORING	0-3	0	Coring and decrease nosie.0:off.	
M7	AGC-TOP	0-63	24	RF AGC adjusting	
	AGC-SPEED	0-3	1	AGC delay time adjusting	
	LOGO OPT	ON/OFF	OFF	LOGO option	
	VOL6	0-63	17	Volume setting of 10%	
	VOL16	0-63	32	Volume setting of 25%	
	VOL32	0-63	48	Volume setting of 50%	
	VOL63	0-63	63	Volume setting of 100%	
	7KEYS	ON/OFF	OFF	“POWER”key option of key board	
	X RAY	ON/OFF	OFF	X RAY protect function option	
	OSVE	ON/OFF	OFF	AKB detect line hide option(supported by TDA9353/63)	
	HCO	ON/OFF	OFF	Auto horizenal range revise option(supported by TDA9353/63)	
M8	FREQUENCY		50HZ	60HZ	Display vertical frequency automaticly
	VSLOPE	0~63	31	31	Vertical slope adjusting
	VSHIFT	0~63	31	31	Vertical shift adjusting
	VAMP	0~63	31	31	Vertical size adjusting
	VSCOR	0~63	31	31	Vertical correct adjusting
	HSHIFT	0~63	31	31	Horizontal shift adjusting
	RGBHS	0~63	31	Vertical shift adjusting of RBG/YUV	
	RGB HPOS	0~63	31	OSD horizontal shift adjusting of RBG/YUV	
	EW WIDTH	0~63	31	Horizontal range adjusting	
	EW PARA	0~63	31	East-west curve adjusting	
	UP CORNER	0~63	31	Up conner adjusting	
	LO CORNER	0~63	31	Low conner adjusting	
	H-PARA	0~63	31	Paralleloqram adjusting	
	H-BOW	0~63	31	Bow adjusting	
	EW-TRAPE	0~63	31	Trapezoid adjusting	
M9	BT	0~63	48	Brightness adjusting of white balance	
	CT	0~63	48	Contrast adjusting of white balance	
	SC		OFF	Single horizontal line.open by “V+”;closed by “V-”	
	RB	0~63	32	Red cut adjusting	
	GB	0~63	32	Green cut adjusting	

	RD	0~63	32	Red drive adjusting
	GD	0~63	32	Green drive adjusting
	BD	0~63	32	Blue drive adjusting
	SB	0~63	40	Sub-brightness adjusting

ATTACHED TABLE1

	BAND=0		BAND=1		BAND=2	
	PIN10(B2)	PIN11(B1)	PIN10(B2)	PIN11(B1)	PIN10(B2)	PIN11(B1)
VL	0	0	0	1	1	0
VH	1	0	1	0	0	1
U	0	1	1	1	1	1

TABLE2

AV OPTION:MENU1→AV CFG;

0=TV→AV;1=TV→AV1→AV2;2=TV→AV1→AV2→S-VIDEO;3=TV→AV1→AV2→S-VIDEO→YUV;
5= TV→AV→S-VIDEO;6= TV→AV→S-VIDEO→YUV;7= TV→AV→YUV;8=TV→EURO;
9=TV→AV→EURO

When "AV OPT" is setting "OFF",the logic table of AV control

MODE	TV	AV2	AV/AV1/YUV/EURO(RGB)	SVHS
Pin62	L	L	H	H
Pin63	L	H	L	H

When "AV OPT" is setting "ON",the logic table of AV control

MODE	TV	AV2	AV/AV1/YUV/EURO(RGB)	SVHS
Pin62	H	L	L	L
Pin63	H	H	L	L

TABLE3

Pin5,pin7,pin8 is variable for compating with other hardware

NTSC	Control SAW filter ,switch between M and N	VOL2	PWM control output for left AMP.
DVD	Output for DVD&TV cabine control	VOL1	PWM control output for right AMP.
SCART	Scart detect level input	WOOFER	For woofer controlling
MUTE	For audio mute mode	MUTE2	For mute mode 2
LED	For LED controlling	SV-DT	S-VIDEO detect level input
BAND3	For band3 controlling	5060	Output for 50/60Hz alternate

2. OM8370
B/W BALANCE

MI	Items	Variable	Preset	discription
	DRI R	0~63	32	RED DRIVE
	DRI G	0~63	32	GREEN DRIVE
	DRI B	0~63	32	BLUE DRIVE
	CUT R	0~63	32	RED CUT
	CUT G	0~63	32	GREEN CUT
	BT	0~63	32	Brightness adjust of white balance
	CT	0~63	32	contrast adjust of white balance
Note: press "MUTE" To enter the single horizontal line mode,and press again exit.				
S0	POW	0-2	1	Switch on mode,0:standby,1:power on;2:remember last time.
	LOGO	ON/OFF	OFF	LOGO option
	DRCS LOAD	ON/OFF	OFF	Speicel letter load for logo(supportted by 24C16,set OFF normally)
	SAVER	ON/OFF	OFF	Option of screen saver
	MENU BG	0~2	2	Background of menu(0:no;1:blue;2:half tone)
	AV OPT	ON/OFF	ON	AV control logic level option

		TV	AV1	AV2	SVHS	OTHER	
OFF	PIN62	0	1	0	1	1	
	PIN63	0	0	1	1	0	
ON	PIN62	1	0	0	0	0	
	PIN63	1	0	1	0	0	

	AV2	ON/OFF	ON	Option of AV2
	SVHS	ON/OFF	OFF	Option of SVHS
	YUV	ON/OFF	OFF	Option of YUV
	SCART	ON/OFF	OFF	Option of SCART
	DVD	ON/OFF	OFF	Option of DVD
	DVD SRC	V/S/YUV	V	Select of DVD input mode
	DVD LOGIC	0-3	3	DVD logic output level select(pin62 63)
S1	FREQUENCY		50HZ	Display vertical frequency automaticly
	H PH	0~63	31	Horizontal shift adjusting
	V SL	0~63	24	Vertical slope adjusting
	V SH	0~63	21	Vertical shift adjusting
	V SI	0~63	33	Vertical size adjusting
	V SC	0~63	27	Vertical correct adjusting
	H PH YUV	0~63	31	Horizontal shift adjusting of YUV/RGB
S2	AGC	0~63	24	Adjusting of RF AGC
	COOL R	0~63	30	Cool color temperature adjusting of red
	COOL G	0~63	32	Cool color temperature adjusting of green
	COOL B	0~63	42	Cool color temperature adjusting of blue
	WARM R	0~63	42	Warm color temperature adjusting of red
	WARM G	0~63	32	Warm color temperature adjusting of green

	WARM B	0~63	30	Warm color temperature adjusting of blue
	BR-YUV	0~63	32	Bias voltage of red for YUV
	BG-YUV	0~63	32	Bias voltage of green for YUV
	WIDE	0~63	17	Vertical size adjusting of wide mode
	ZOOM	0~63	50	Vertical size adjusting of zoom mode
S3	VP	7~63	38	Vertical shift of OSD
	HP	0~63	30	Horizonol shift of OSD
	HP-YUV	0~30	30	Horizonol shift of YUV
	OSD BRI	0~3	0	Brightness of OSD
S4	AGC-SPEED	0-3	1	AGC delay time adjusting
	POW ON TIM	6-15	8	Powe on delay on time setting
	VIDEO OUT	IF/CVBS	CVBS	AV out mode option(IF:TV;CVBS:screen)
	PIN5		NTSC	Compatible with other hardware, see table*
	PIN7		VOL1	Compatible with other hardware, see table*
	PIN8		MUTE	Compatible with other hardware, see table*
	AKB	ON/OFF	ON	Auto black level adjusting
	NBL	ON/OFF	OFF	Auto detect of black current
	RC FORMAT	NEC/RC5	NEC	Code select of Renote Control Note:wrong select may cause useless of RC
	KEYBOARD	SANYO/ PHILIPHS	SANYO	Keyboard select
	MONO			
* For compatible of other hardware, there are different functions of pin 5,7,8.				
	woofer			For woofer control
	Vol2			Volume PWM control of right AMP.
	Vol1			Volume PWM control of left AMP.
	Band3			For band control for the third pin of tuner
	NTSC			For SAW filter control
	SCART			Detect signal input of SCART
	DVD			Output control level for DVD
	MUTE			Control signal for MUTE
	5060			Control signal for 50/60 switch
	MUTE2			Control signal for MUTE2
	SV-DT			Detect signal For S-Video
S5	ENGLISH	ON/OFF	ON	Language option
	FRENCE	ON/OFF	ON	Language option
	RUSSIAN	ON/OFF	ON	Language option
	TURKISH	ON/OFF	ON	Language option
	FARSI	ON/OFF	ON	Language option
	ARABIC	ON/OFF	ON	Language option
	BULGARIAN	ON/OFF	ON	Language option
	RUMANNIAM	ON/OFF	ON	Language option
	SPANISH	ON/OFF	ON	Language option

	PORTUGUESE	ON/OFF	ON	Language option
	ITALIAN	ON/OFF	ON	Language option
	GERMAN	ON/OFF	ON	Language option
	DUTCH	ON/OFF	ON	Language option
	SWEDISH	ON/OFF	ON	Language option
	NORWEGIAN	ON/OFF	ON	Language option
	HUNGARIAN	ON/OFF	ON	Language option
	POLISH	ON/OFF	ON	Language option
	CZECH	ON/OFF	ON	Language option
	SLOVENE	ON/OFF	ON	Language option
	CROATIAN	ON/OFF	ON	Language option
	MACEDONIAN	ON/OFF	ON	Language option
	SERBIAN	ON/OFF	ON	Language option
	GREEK	ON/OFF	ON	Language option

	Items	Variable	Preset				
S6	UOC VOL SW	0~63	63	Subsidiary contrast setting			
	UOC/PWM VOL	0~63	63	Subsidiary color setting			
	VOL10	0~100	25	Volmule of diagram 25%			
	VOL25	0~100	50	Volmule of diagram 50%			
	VOL50	0~100	75	Volmule of diagram 75%			
	VOL100	0~100	100	Volmule of diagram 100%			
	WOOFER	ON/OFF	OFF	Woofer option on menu			
	TDA9860 WOOF	ON/OFF	OFF	Woofer output mode select (from TDA9860 or PWM) OFF:PWM;on:TDA9860.			
	TDA9874 GAIN	ON/OFF	OFF	Gain of TDA9874 output			
	AGN	ON/OFF	OFF	Gain of FM output .OFF:normal;no:+6dB			
S7	IF	38/38.9/ 45.75/ 58.75	38.9M	IF setting			
	FMWS	0~2	0	Band width of FM demodulation.0:standard(225kHz) ;1:for FM over modulation (450kHz);2:over modulation (600kHz)			
	VST	0~2	0	VST band control option			
							BAND3
			Band opt=0	VHFL	0	0	
				VHFH	1	0	
				UHF	0	1	
			Band opt=1	VHFL	0	1	
				VHFH	1	0	
				UHF	1	1	

			Band opt=2/ band 3	VHFL	1	0	0
				VHFH	0	1	0
				UHF	1	1	1
	FST BAND	ON/OFF	OFF	OFF:TABLE1;ON:TABLE2. NOTE*			
	FST LH			Frequency of H band setting*			
	FST HU			Frequency of U band setting*			
	SECAM	ON/OFF	ON	SECAM system option			
	DK	ON/OFF	ON	Sound system option			
	I	ON/OFF	ON	Sound system option			
	M	ON/OFF	OFF	Sound system option			
	BG	ON/OFF	ON	Sound system option			
	AUTO SOUND	ON/OFF	ON	Sound system auto indefine for auto search			
	SIFPREFER	DK/I/BG/ M	BG	Perfer sound system for auto search			
S8	SUB CON	0~63	32	Subsidiary contrast setting			
	SUB BRI	0~63	32	Subsidiary brightness setting			
	SUB COL	0~63	32	Subsidiary color setting			
	SUB SHA	0~63	32	Subsidiary sharp setting			
	SUB TINT	0~31	16	Subsidiary tint setting			
	YDLY PAL	0~15	2	Y delay time setting of PAL			
	YDLY NTSC	0~15	2	Y delay time setting of NTSC			
	YDLY AV	0~15	2	Y delay time setting of AV			
	CATHE	0~15	8	Cathode drive level of CRT			
	SC.BRI	0~63	8	Brightness of the single horizontal line mode			
	PWL	0~15	15	Limit of peak of white level			

5. ICs functional description

UOC TDA93XX/83XX

SYMBOL	PIN	DESCRIPTION
STAND BY output.	1	In STAND BY mode, high level (Power OFF). For Power ON this pin will be reduced to low.
SCL	2	I^2C-bus clock line
SDA	3	I^2C-bus data line
TUNING	4	tuning Voltage (Vt) PWM output
P3.0/NTSC SW	5	Port 3.0 or NTSC output/SCART SW input, Forced NTSC selection, Low-level output, otherwise High output.
KEY	6	Control keys input *3
VOL	7	Sound Volume control PWM output
MUTE	8	Sound mute output
VSSC/P	9	Digit ground for µ-controller core and periphery
BAND1	10	Tuner Band selection output
BAND2	11	Tuner Band selection output
VSSA	12	Analog ground of teletext decoder and digital ground of TV-processor

SECPLL	13	SECAM PLL decoupling
VP2	14	2nd supply voltage TV-processor(+8V)
DECDIG	15	decoupling digital supply of TV-processor
PH2LF	16	Phase-2 filter
PH1LF	17	Phase-1 filter
GND3	18	Ground 3 for TV-processor
DECBG	19	Band gap decoupling
AVL/EWD	20	Automatic volume leveling /EAST-WEST drive output
VDRB	21	Vertical drive B output
VDRA	22	Vertical drive A output
IFIN1	23	IF input 1
IFIN2	24	IF input 2
IREF	25	Reference current input
VSC	26	Vertical sawtooth capacitor
TUNER AGC	27	Tuner AGC output
AUDEEM/SIFIN1 *1	28	Audio deemphasis or SIF input
DECSDEM/SIFIN2	29	decoupling sound demodulator or SIF input 2
GND2	30	ground 2 for TV processor
SNDPLL/SIFAGC *1	31	narrow band PLL filter or AGC sound IF
AVL/SNDIF/REF0/ AMOUT *1	32	Automatic Volume Levelling / sound IF input / subcarrier reference output / audio deemphasis
HOUT	33	horizontal output
FBISO	34	flyback input/sandcastle output
AUDEXT/QSSO/ AMOUT *1	35	external audio output / QSS intercarrier out
EHTO	36	EHT/overvoltage protection input
PLL IF	37	IF-PLL loop filter
IFVO/SVO	38	IF video output / selected CVBS output
VP1	39	supply voltage TV processor
CVBS INT	40	internal CVBS input
GND1	41	ground for TV processor
CVBS/Y	42	CVBS/Y input
CHROMA	43	C input
AUDOUT/AMOUT *1	44	audio output /AM audio output (volume controlled)
INSSW2	45	2nd RGB / YUV insertion input
R2/VIN	46	2nd R input / V (R-Y) input / PR input
G2/YIN	47	2nd G input / Y input
B2/UIN	48	2nd B input / U (B-Y) input / PB input
BCLIN	49	beam current limiter input
BLKIN	50	black current input / V-guard input
RO	51	Red output
GO	52	Green output
BO	53	Blue output
VDDA	54	analog supply of Closed Caption decoder and digital supply of TV-processor (3.3

		V)
VPE	55	OTP Programming Voltage
VDDC	56	digital supply to core (3.3 V)
OSCGND	57	oscillator ground supply
XTALIN	58	crystal oscillator input
XTALOUT	59	crystal oscillator output
RESET	60	reset
VDDP	61	digital supply to periphery (+3.3 V)
P1.0/INT1	62	TV/AV (AV1) / AV2 /S-VHS mode Output.
P1.1/T0	63	TV/AV (AV1) / AV2 /S-VHS mode Output.
P1.2/INT0	64	Remote control signal input.

Note

1. The function of pin 20, 28, 29, 31, 32, 35 and 44 is dependent on the IC version (mono intercarrier FM demodulator /QSS IF amplifier and East-West output or not) and on some software control bits. The valid combinations are given in table 1.

2. the vertical guard function can be controlled via pin 49 or pin 50. the selection is made by means of the IVG bit in subaddress 2BH.

TABLE 1

IC version	FM-PLL version				QSS version					
East-West Y/N	**N**		**Y**		**N**			**Y**		
CMB1/CMB0 bits	**00**	**01/10/11**	**00**	**01/10/11**	**00**	**01/10/11**		**00**	**01/10/11**	
AM bits	**-**	**-**	**-**	**-**	**-**	**0**	**1**	**-**	**0**	**1**
Pin 20	**AVL**		**EWD**		**AVL**			**EWD**		
Pin 28	**AUDEEM**				**SIFIN1**					
Pin 29	**DECSDEM**				**SIFIN2**					
Pin 31	**SNDPLL**				**SIFAGC**					
Pin 32	**SNDIF(1)**	**REFO(2)**	**AVL/SNDIF(1)**	**REFO(2)**	**AMOUT**	**REFO(2)**		**AMOUT**	**REFO(2)**	
Pin 35	**AUDEXT**				**AUDEXT**	**QSSO**	**AMOUT**	**AUDEXT**	**QSSO**	**AMOUT**
Pin 44	**AUDOUT**				**Controlled AM or audio out**					

Note

1. When additional (external) selectivity is required for FM-PLL system pin 32 can be used as sound IF input. This function is selected by means of SIF bit in subaddress 28H.

2. the reference output signal is only available for the CMB1/CMB0 setting of 0/1. for the other settings this pin is a switch output(see also 5 table 67).

Pin No. 6: **Control keys input voltage**

Function	**POWER**	**MENU**	**TV/AV**	**V-**	**V+**	**P-**	**P+**
Voltage	**11/16-13/16VDD**	**9/16-11/16VDD**	**7/16-9/16VDD**	**5/16-7/16VDD**	**3/16-5/16VDD**	**1/16-3/16VDD**	**0-1/16VDD**

AN17821A/17823A Function : **audio output**

Symbol	PIN	Function	Symbol	PIN	Function
Vcc	1	Power supply	GND	7	ground
Out 1 (+)	2	Ch 1 output (+)	In 2	8	Ch 2 input
GND(out 1)	3	Ch 1Ground	VOL	9	Volume Control
Out 1 (-)	4	Ch 1 output (-)	Out 2 (-)	10	Ch 2 output (-)
Standby	5	Mute input	GND(out 2)	11	Ch 2 Ground
In 1	6	Ch 1 input	Out 2 (+)	12	Ch 2 output (+)

Note: AN17823A is pin 1 to 9, AN17821A is pin 1 to 12.

LA78040/78041/TDA8172A Function : **vertical output**

Symbol	**PIN**	**Function**	**Symbol**	**PIN**	**Function**
INV IN	**1**	**Input**	**V OUT**	**5**	**Vertical output**
VCC1	**2**	**Power**	**VCC2**	**6**	**Output power supply**
PUMP UP	**3**	**Pump up power**	**NON INV IN**	**7**	**Negative feedback**
GND	**4**	**Ground**			

6. Test point Waveforms

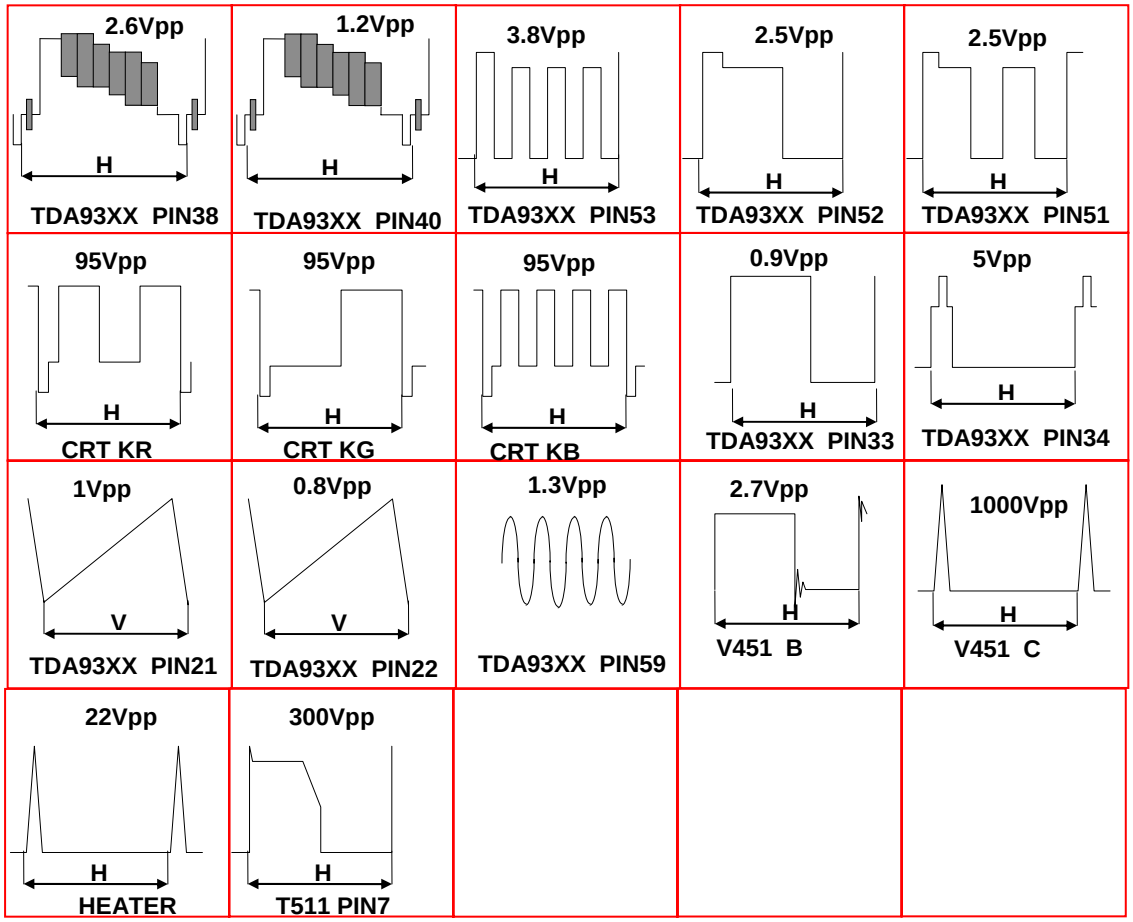

7. IC voltages

TDA93XX

PIN	1	2	3	4	5	6	7	8	9	10	11	12	13	14	15	16
V	2.8	3.8	3.6	3.3	3.5	3.5	0.1	0.1	0	5.4	0.1	0	2.3	8	5	3
PIN	17	18	19	20	21	22	23	24	25	26	27	28	29	30	31	32
V	4	0	4	0.9	0.7	0.8	1.9	1.9	3.9	3.8	1.6	3.2	3.4	0	2.4	0.1
PIN	33	34	35	36	37	38	39	40	41	42	43	44	45	46	47	48
V	0.6	0.5	3.7	1.7	2.4	3.1	8	3.8	0	3.4	1.5	3.6	2.3	2.6	2.6	2.6
PIN	49	50	51	52	53	54	55	56	57	58	59	60	61	62	63	64
V	2.3	7.2	2.7	2.7	2.7	3.5	0	3.5	0.1	1.7	1.8	0	3.5	0.1	0.1	5

LA76040

PIN	1	2	3	4	5	6	7
V	0.7	15	-12	-15	0.3	15.9	-0.07

AN 17821A

PIN	1	2	3	4	5	6	7	8	9	10	11	12	
V	12	7	0	7	3.3	1.4	0	1.4	0	7	0	7	

TDA9859

PIN	1	2	3	4	5	6	7	8	9	10	11	12	13	14
V	4.0	0	4.0	8.0	4.0	8.0	4.0	0	4.0	4.0	4.0	4.0	4.0	4.0
PIN	15	16	17	18	19	20	21	22	23	24	25	26	27	28
V	4.0	4.5	4.6	4.0	4.0	4.0	4.0	4.0	4.0	4.0	0	4.0	4.0	4.0
PIN	29	30	31	32										
V	4.0	4.0	0	4.0										

8. PURITY / CONVERGENCE ADJUSTMENT

PURITY ADJUSTMENT

1. Demagnetize CRT with the demagnetizer.
2. Loosen the retainer screw of the deflection yoke.
3. Remove the wedges.
4. Input a green raster signal from the signal generator, and turn the screen to green raster.
5. Move the deflection yoke backward.
6. Bring the long lug of the purity magnets on the short lug and position them horizontally. (Fig2)
7. Adjust the gap between two lugs so that the GREEN RASTER will come into the center of the screen. (Fig. 3)
8. Move the deflection yoke forward, and fix the position of the deflection yoke so that the whole screen will become green.
9. Insert the wedge to the top side of the deflection yoke so that it will not move.
10. Imput a crosshatch signal.
11. Verify that the screen is horizontal.
12. Input red and blue raster signals, and make sure that purity is properly adjusted.

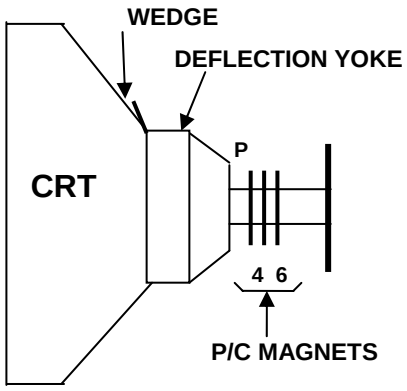

P: PURITY MAGNET
4: 4-POLES (convergence magnets)
6: 6-POLES (convergence magnets)

Fig. 1

PURITY MAGNETS

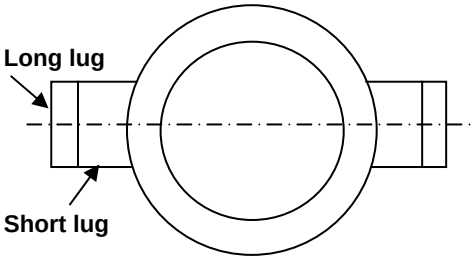

Bring the long lug over the short lug and position them horizontally.

Fig. 2

(FRONT VIEW)

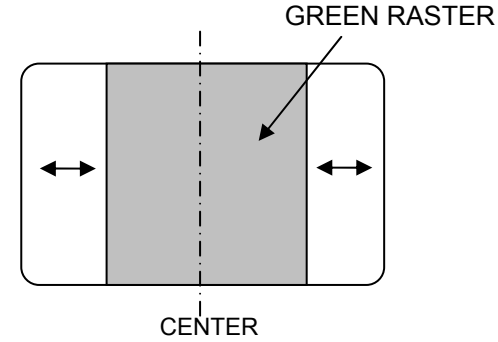

Fig. 3

STATIC CONVERGENCE ADJUSTMENT

1. Input a crosshatch signal.
2. Using 4-pole convergence magnets, overlap the red and blue lines in the center of the screen (Fig. 1) and turn them to magenta (red/blue).
3. Using 6-pole convergence magnets, overlap the magenta (red/blue) and green lines in the center of the screen and turn them to white.
4. Repeat 2 and 3 above, and make the best convergence.

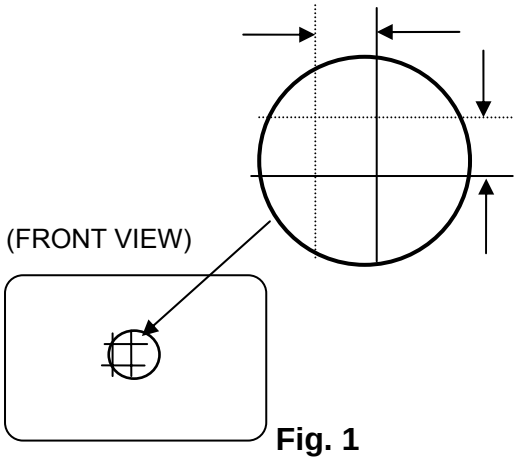

Fig. 1

DYNAMIC CONVERGENCE ADJUSTMENT

1. Move the deflection yoke up and down and overlap lines in the periphery. (Fig. 2)
2. Move the deflection yoke left to right and overlap the lines in the periphery. (Fig. 3)
3. Repeat 1 and 2 above, and make the best convergence.

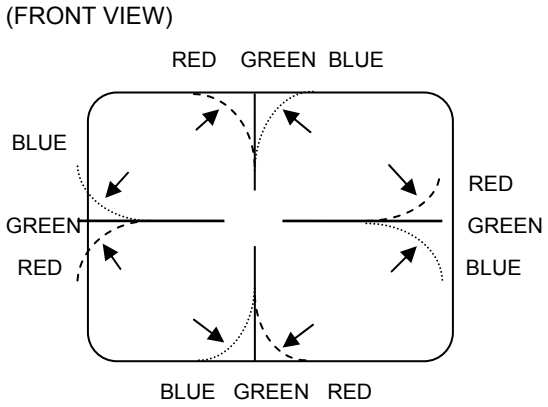

Fig.2

After adjustment, fix the wedge at the original position.
Fasten the retainer screw of the deflection yoke.
Fix the 6 magnets with glue.

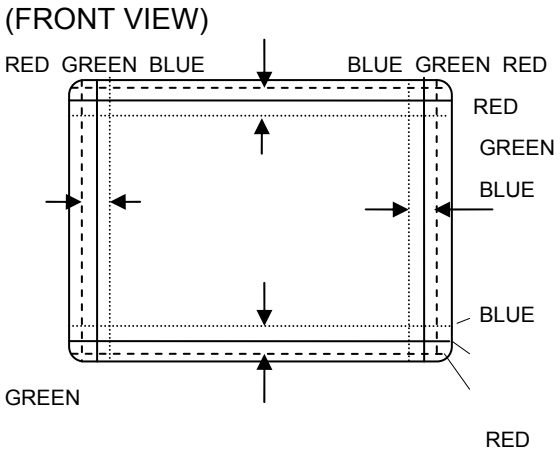

Fig. 3

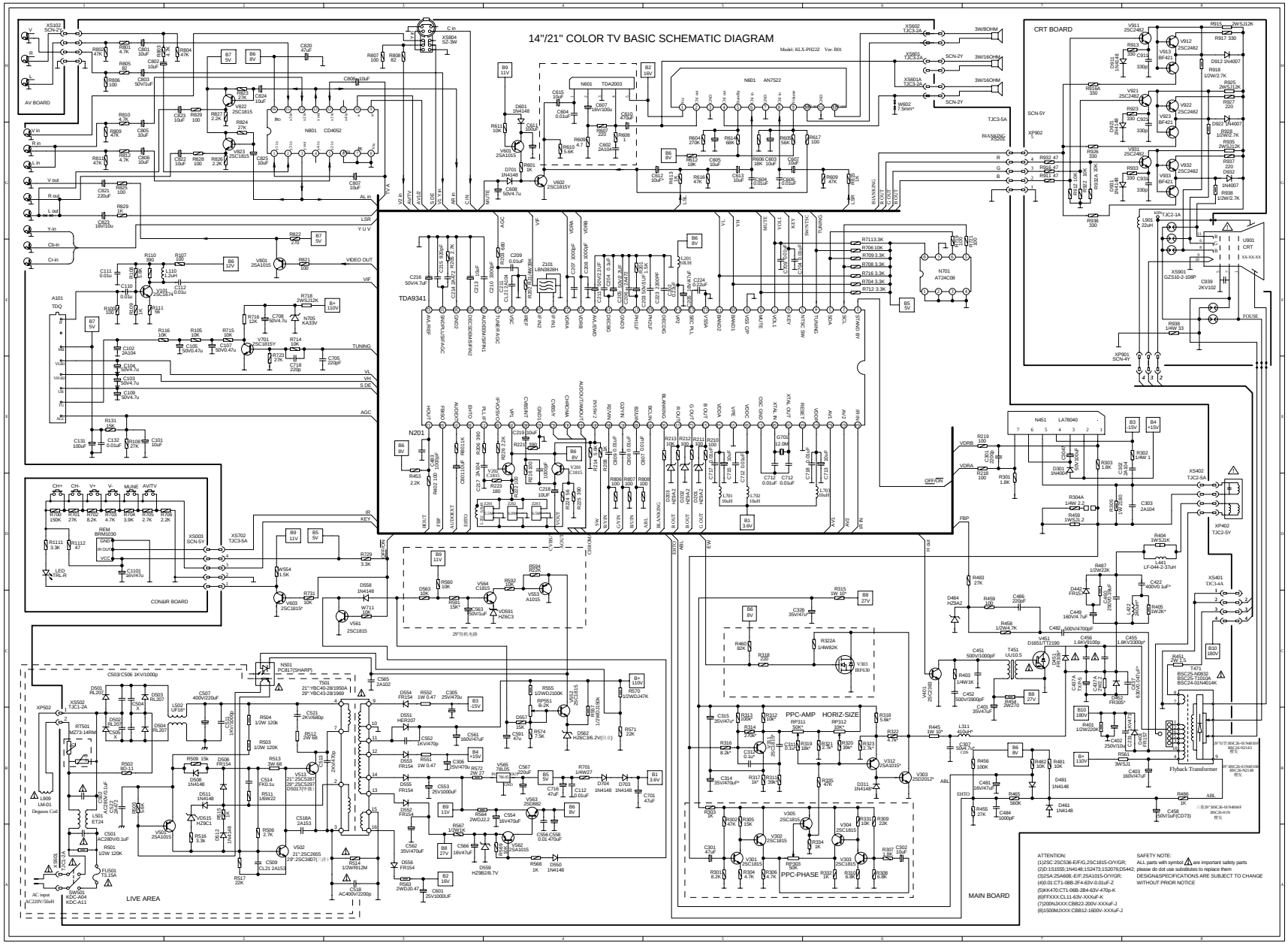
14"/21" COLOR TV BASIC SCHEMATIC DIAGRAM
Model: KLX-PH22Z Ver: B01
AV BOARD
CRT BOARD
CON&IR BOARD
LIVE AREA
MAIN BOARD
TDA9341
TDA3203
N601
AN7522
CD4052
N701
AT24C08
N451
LA7840
N201
N501
PCB(SHARP)
PPC-AMP
HORIZ-SIZE
PPC-PHASE
Flyback Transformer
ATTENTION:
(1)2SC:2SC536-E/F/G,2SC1815-O/Y/GR;
(2)D:1S155;1N4148;1S2473;1S2076;DS442;
(3)2SA:2SA608;-E/F;2SA1015-O/Y/GR;
(4)0.01;CT1-08B-3F4-63V-0.01uF-Z
(5)KK470;CT1-06B-2B4-63V-470p-K
(6)FFXXX;CL11-63V-XXXuF-K
(7)300WJXXX;CBB22-350V-XXXuF-J
(8)1500WJXXX;CBB12-1600V-XXXuF-J
SAFETY NOTE:
ALL parts with symbol ⚠ are important safety parts
please do not use substitutes to replace them
DESIGN&SPECIFICATIONS ARE SUBJECT TO CHANGE WITHOUT PRIOR NOTICE

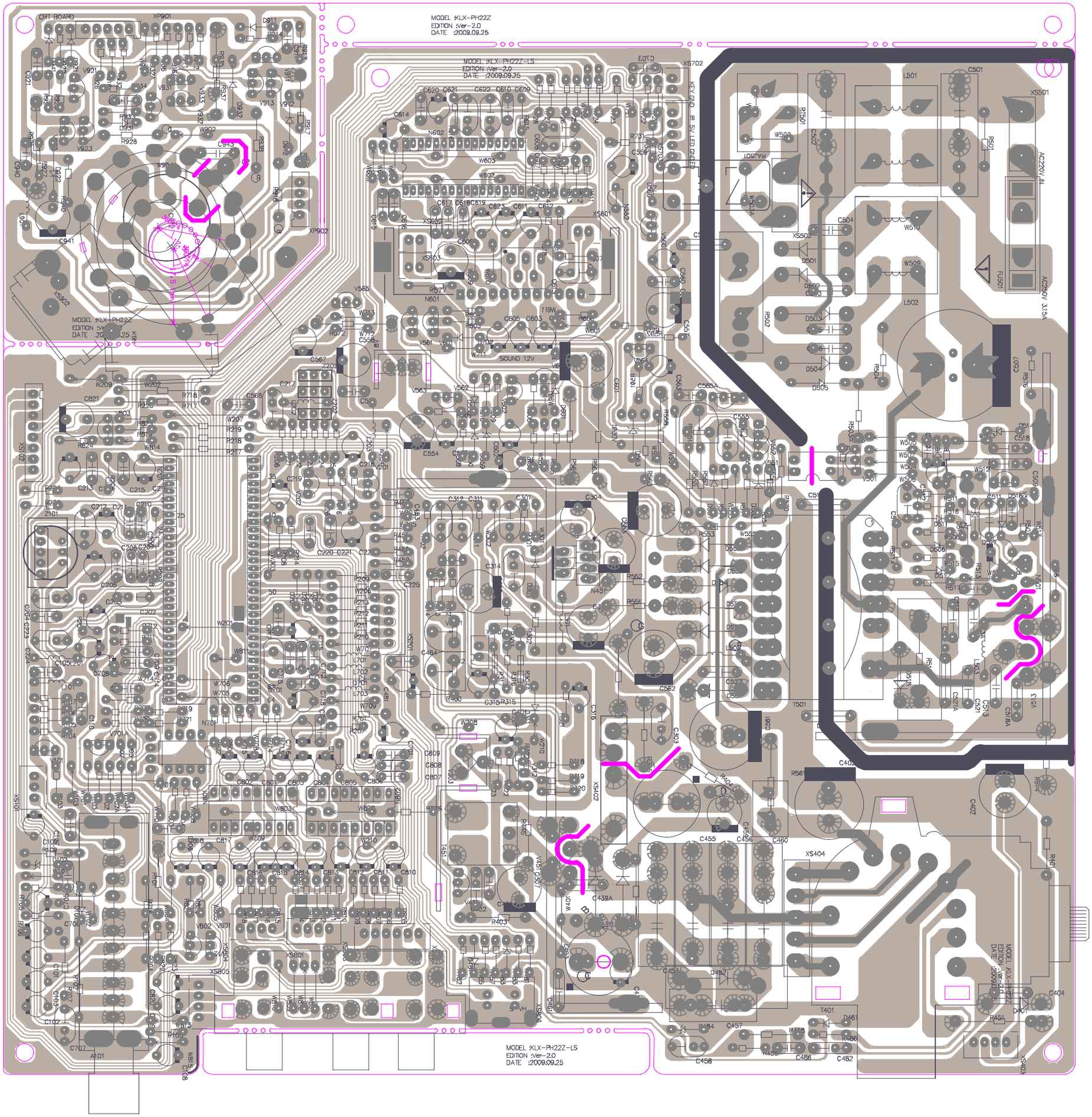
CRT BOARD
MODEL :KLX-PH22Z
EDITION :Ver-2.0
DATE :2009.09.25
MODEL :KLX-PH22Z-LS
EDITION :Ver-2.0
DATE :2009.09.25
KEY GND IR 5V LED GNDE
SOUND 12V
AC220V IN
AC250V 3.15A
MODEL :KLX-PH22Z-LS
EDITION :Ver-2.0
DATE :2009.09.25

KLX-PH22 VER 3.0 main bom list（for 14 and 21 inch）

PAL/SECAM BG/DK/I , MONO AUDIO , AV port（front three and back TWO）

MAIN BOM：BOM-KLX-PH22 VER 3.0

NO.	PART NO.	NAME	SPECIFICATION	UNIT	QTY	PART PLACE	BOARD PLACE
Ⅰ、Electron component							
1	10-00PC817-000	IC	PC817B	PCS	1	N501	MAIN
2	10-0078L05-000	IC	78L05	PCS	1	V565	MAIN
3	10-0078040-000	IC	LA78040/STV8172A	PCS	1	N451	MAIN
4	10-0024C06-000	IC	AT24C08	PCS	1	N701	MAIN
5	10-0000574-000	IC	UPC574J/W574/KA33V	PCS	1	N552	MAIN
6	10-0009351-000	IC	TDA9351/61/53/63	PCS	1	N201	MAIN
7	10-000821A-000	IC	AN17823A/AN7523	PCS	1	N601	MAIN
8	11-2SA1015-P00	TRANSISTOR	2SA1015-O/Y	PCS	2	V501.V562.	MAIN
9	11-2SC1815-P00	TRANSISTOR	2SC1815Y	PCS	7	V201.V202.V552.V561.V601.	MAIN
10	11-2SD2012-P00	TRANSISTOR	2SD2012	PCS	1	V563	MAIN
11	11-2SC3807-000	TRANSISTOR	2SC3807-CTV-YA/2SC2655	PCS	1	V502	MAIN
12	11-2SC2383-P00	TRANSISTOR	2SC2383Y	PCS	1	V401	MAIN
13	11-00BF423-P00	TRANSISTOR	BF423/BF421	PCS	3	V913.V923.V933.	CRT
14	11-00BF422-P00	TRANSISTOR	BF422/BF420	PCS	6	V911.V912.V921.V922.V931.V932.	CRT
15	11-0PH2369-000	TRANSISTOR	PH2369	PCS	1	V701A	MAIN
16	11-2SC5287-000	TRANSISTOR	2SC5287	PCS	1	V513	MAIN
17	11-2SC1674-000	TRANSISTOR	2SC1674	PCS	1	V101	MAIN
18	11-2SD1651-C00	TRANSISTOR	2SD1651C	PCS	1	V451	MAIN
19	12-0IN4148-P52	SWITCHING DIODE	1N4148	PCS	11	D461.D481.D508.D511.D512.D550.D702.D558	MAIN
						D911.D921.D931	CRT
20	12-01N4007-P52	SWITCHING DIODE	1N4007	PCS	4	D301.	MAIN
						D912.D922.D932.	CRT
21	12-00FR154-L15	SWITCHING DIODE	FR154(L15/H10)	PCS	7	D506.D552.D553.D554.D555.D556	MAIN
22	12-00FR157-P52	SWITCHING DIODE	FR157	PCS	4	D401.D462.	MAIN
23	12-0HER207-L15	SWITCHING DIODE	HER207(L15/H10)	PCS	1	D551.	MAIN
24	12-00RL207-P52	SWITCHING DIODE	RL207	PCS	4	D501.D502.D503.D504.	MAIN
25	12-03V43C3-P52	ZENER DIODE	3C3/3.4V	PCS	1	D701	MAIN
26	12-05V15C2-P52	ZENER DIODE	5C2/5.1V	PCS	2	D101.	MAIN
27	12-06V26C3-P52	ZENER DIODE	6C3/6.2V	PCS	1	D562.	MAIN
28	12-08V29A2-P52	ZENER DIODE	9A2/8.2V	PCS	2	D201.D202.D203.D484.D941.	MAIN
29	12-08V79B2-P52	ZENER DIODE	9B2/8.7V	PCS	1	D559.	MAIN

NO.	PART NO.	NAME	SPECIFICATION	UNIT	QTY	PART PLACE	BOARD PLACE
30	12-09V19C1-P52	ZENER DIODE	9C1/9.1V	PCS	1	D515	MAIN
31	16-RMF393J-P52	CARBON FILM RESISTOR	RM-1/6W-39KΩ-G	PCS	1	R202.	MAIN
32	16-RTF390J-P52	CARBON FILM RESISTOR	RT14-1/6W-39Ω-J	PCS	1	R103.	MAIN
33	16-RTF470J-P52	CARBON FILM RESISTOR	RT14-1/6W-47Ω-J	PCS	3	R911.R916.R932.	CRT
34	16-RTF560J-P52	CARBON FILM RESISTOR	RT14-1/6W-56Ω-J	PCS	1	R224.	MAIN
35	16-RTF101J-P52	CARBON FILM RESISTOR	RT14-1/6W-100Ω-J	PCS	13	R210.R211.R212.R216.R218.R219.R222.	MAIN
						R402.R459.R719.R721.R722.R809.	MAIN
36	16-RTF181J-P52	CARBON FILM RESISTOR	RT14-1/6W-180Ω-J	PCS	1	R223.	MAIN
37	16-RTF221J-P52	CARBON FILM RESISTOR	RT14-1/6W-220Ω-J	PCS	4	R106.	MAIN
						R917.R927.R937.	CRT
38	16-RTF331J-P52	CARBON FILM RESISTOR	RT14-1/6W-330Ω-J	PCS	3	R916A.R926.R936.	CRT
39	16-RTF391J-P52	CARBON FILM RESISTOR	RT14-1/6W-390Ω-J	PCS	6	R206.R221.R225.	MAIN
						R913.R923.R933.	CRT
40	16-RTF471J-P52	CARBON FILM RESISTOR	RT14-1/6W-470Ω-J	PCS	1	R107	MAIN
41	16-RTF681J-P52	CARBON FILM RESISTOR	RT14-1/6W-680Ω-J	PCS	2	R203.R731	MAIN
42	16-RTF102J-P52	CARBON FILM RESISTOR	RT14-1/6W-1KΩ-J	PCS	8	R207.R208.R486.R515.R568.R801.R802.R812	MAIN
43	16-RTF122J-P52	CARBON FILM RESISTOR	RT14-1/6W-1.2KΩ-J	PCS	1	R104.	MAIN
44	16-RTF182J-P52	CARBON FILM RESISTOR	RT14-1/6W-1.8KΩ-J	PCS	3	R215.R301.R303.	MAIN
45	16-RTF222J-P52	CARBON FILM RESISTOR	RT14-1/6W-2.2KΩ-J	PCS	2	R226.R453.	MAIN
46	16-RTF272J-P52	CARBON FILM RESISTOR	RT14-1/6W-2.7KΩ-J	PCS	2	R205.R506.	MAIN
47	16-RTF332J-P52	CARBON FILM RESISTOR	RT14-1/6W-3.3KΩ-J	PCS	9	R516.R704.R708.R709.R711.R712.R715.	MAIN
48	16-RTF392J-P52	CARBON FILM RESISTOR	RT14-1/6W-3.9KΩ-J	PCS	2	R457.R606.	MAIN
49	16-RTF472J-P52	CARBON FILM RESISTOR	RT14-1/6W-4.7KΩ-J	PCS	2	R105.R613.	MAIN
50	16-RTF562J-P52	CARBON FILM RESISTOR	RT14-1/6W-5.6KΩ-J	PCS	3	R214.R505.R710.	MAIN
51	16-RTF752J-P52	CARBON FILM RESISTOR	RT14-1/6W-7.5KΩ-J	PCS	2	R574	MAIN
52	16-RTF103J-P52	CARBON FILM RESISTOR	RT14-1/6W-10KΩ-J	PCS	16	R213.R481.R482.R569.R610.R614.R705.	MAIN
						R706.R707.W711.R725.R726.R811.	MAIN
						R922.R932A.R912.	CRT
53	16-RTF153J-P52	CARBON FILM RESISTOR	RT14-1/6W-15KΩ-J	PCS	3	R201.R509.R724.	MAIN
54	16-RTF183J-P52	CARBON FILM RESISTOR	RT14-1/6W-18KΩ-J	PCS	1	D557	MAIN
55	16-RTF223J-P52	CARBON FILM RESISTOR	RT14-1/6W-22KΩ-J	PCS	3	R209.R517.R571.	MAIN
56	16-RTF273J-P52	CARBON FILM RESISTOR	RT14-1/6W-27KΩ-J	PCS	2	R455.R483.	MAIN
57	16-RTF333J-P52	CARBON FILM RESISTOR	RT14-1/6W-33KΩ-J	PCS	3	R102.R452.	MAIN
58	16-RTF683J-P52	CARBON FILM RESISTOR	RT14-1/6W-68KΩ-J	PCS	1	R603.	MAIN
59	16-RTF104J-P52	CARBON FILM RESISTOR	RT14-1/6W-100KΩ-J	PCS	2	R456.	MAIN
60	16-RTF154J-P52	CARBON FILM RESISTOR	RT14-1/6W-150KΩ-J	PCS	1	R108.	MAIN
61	16-RTF274J-P52	CARBON FILM RESISTOR	RT14-1/6W-270KΩ-J	PCS	1	R604.	MAIN
62	16-RTF564J-P52	CARBON FILM RESISTOR	RT14-1/6W-560KΩ-J	PCS	1	R465.	MAIN

NO.	PART NO.	NAME	SPECIFICATION	UNIT	QTY	PART PLACE	BOARD PLACE
63	16-RTG10AJ-P52	CARBON FILM RESISTOR	RT14-1/4W-1Ω-J	PCS	1	R302.	MAIN
64	16-RTG22AJ-P52	CARBON FILM RESISTOR	RT14-1/4W-2.2Ω-J	PCS	1	R304A.	MAIN
65	16-RTG220J-P52	CARBON FILM RESISTOR	RT14-1/4W-22Ω-J	PCS	1	R511	MAIN
66	16-RTG270J-P52	CARBON FILM RESISTOR	RT14-1/4W-27Ω-J	PCS	1	R701.	MAIN
67	16-RTG330J-P52	CARBON FILM RESISTOR	RT14-1/4W-33Ω-J	PCS	1	R940.	CRT
68	16-RTG102J-P52	CARBON FILM RESISTOR	RT14-1/4W-1KΩ-J	PCS	1	R403	MAIN
69	16-RTG225J-P52	CARBON FILM RESISTOR	RT14-1/4W-2.2MΩ-J	PCS	1	R576.	MAIN
70	16-RTH102J-P52	CARBON FILM RESISTOR	RT15-1/2W-1KΩ-J	PCS	1	R567	MAIN
71	16-RTH272J-P52	CARBON FILM RESISTOR	RT15-1/2W-2.7KΩ-J	PCS	3	R918.R928.R938.	CRT
72	16-RTH472J-P52	CARBON FILM RESISTOR	RT15-1/2W-4.7KΩ-J	PCS	1	R458.	MAIN
73	16-RTH103J-P52	CARBON FILM RESISTOR	RT15-1/2W-22KΩ-J	PCS	1	R487.	MAIN
74	16-RTH224J-P52	CARBON FILM RESISTOR	RT15-1/2W-220KΩ-J	PCS	2	R401.R501.	MAIN
75	16-RYH124J-P52	METAL OXIDE FILM RESISTOR	RY15-1/2W-120KΩ-J	PCS	2	R503.R504	MAIN
76	16-RYG154J-P52	METAL OXIDE FILM RESISTOR	RY14-1/4W-150KΩ-J	PCS	1	R557.	MAIN
77	16-RYH473J-P52	METAL OXIDE FILM RESISTOR	RY15-1/2W-47KΩ-J	PCS	1	R570.	MAIN
78	16-RYH104J-P52	METAL OXIDE FILM RESISTOR	RY15-1/2W-100KΩ-J	PCS	1	R555.	MAIN
79	16-RYI47BJ-P52	METAL OXIDE FILM RESISTOR	RY16-1W-0.47Ω-J	PCS	1	R551.R552	MAIN
80	16-RYI12AJ-L15	METAL OXIDE FILM RESISTOR	RY16-1W-1.2Ω-J(L15/H10)	PCS	2	R304.	MAIN
81	16-RYI220J-L15	METAL OXIDE FILM RESISTOR	RY16-1W-22Ω-J	PCS	1	R101.	MAIN
82	16-RYI181J-P52	METAL OXIDE FILM RESISTOR	RY16-1W-180Ω-J	PCS	1	R305.	MAIN
83	16-RYI102J-P52	METAL OXIDE FILM RESISTOR	RY16-1W-1KΩ-J	PCS	1	R404.	MAIN
84	16-RYJ68BJ-L20	METAL OXIDE FILM RESISTOR	RY21-2W-0.68Ω-J	PCS	1	R563.	MAIN
85	16-RYJ10AJ-L20	METAL OXIDE FILM RESISTOR	RY21-2W-1Ω-J	PCS	2	R561.R564.	MAIN
86	16-RYJ15AJ-L20	METAL OXIDE FILM RESISTOR	RY21-2W-1.5Ω-J	PCS	1	R451.	MAIN
87	16-RYJ270J-L20	METAL OXIDE FILM RESISTOR	RY21-2W-27Ω-J	PCS	1	R572	MAIN
88	16-RYJ271J-L15	METAL OXIDE FILM RESISTOR	RY21-2W-270Ω-J(L17.5/H10)	PCS	1	R454.	MAIN
89	16-RYJ103J-L20	METAL OXIDE FILM RESISTOR	RY17-2W-10KΩ-J	PCS	1	R558.	MAIN
90	16-RYJ123J-L15	METAL OXIDE FILM RESISTOR	RY21-2W-12KΩ-J(L17.5/H10)	PCS	3	R915.R925.R935.	MAIN
91	16-RYK680J-L20	METAL OXIDE FILM RESISTOR	RY18-3W-68Ω-J	PCS	2	R512.R513.	MAIN
92	16-RIH126K-P52	HIGH VOLTAGE INSULATED RESIS.	RI40-1/2W-12MΩ-K	PCS	1	R514.	MAIN
93	16-MF8D11J-000	ORGANIC SOLID RESISTOR	MF72-8D11	PCS	1	R502.	MAIN
94	16-RW02K2J-000	TRIMMER POTENTIOMETER	W206-2AL2KΩ	PCS	1	RP551.	MAIN
95	16-RM7214J-000	DEGAUSSING THERMISTOR	MZ72A-14RM(three pin)	PCS	1	RAJ501.	MAIN
96	17-00E100M-PO0	MINI ELEC.CAPACITOR	CD110-16V-10μF-M	PCS	15	C101.C102.C103.C108.C213.C219.C603.	MAIN
						C604.C605.C623.C713.C715.C801.C802.	MAIN
						C813	MAIN
97	17-00E470M-PO0	MINI ELEC.CAPACITOR	CD110-16V-47μF-M	PCS	8	C201.C222.C481.C566.C701.C708.C716	MAIN
						C591	MAIN

NO.	PART NO.	NAME	SPECIFICATION	UNIT	QTY	PART PLACE	BOARD PLACE
98	17-00E221M-PO0	MINI ELEC.CAPACITOR	CD110-16V-220μF-M	PCS	1	C567	MAIN
99	17-00E471M-PO0	MINI ELEC.CAPACITOR	CD110-16V-470μF-M	PCS	2	C554.C558.	MAIN
100	17-00F471M-PO0	MINI ELEC.CAPACITOR	CD110-25V-470μF-M	PCS	2	C305.C306.	MAIN
101	17-00F102M-PO0	MINI ELEC.CAPACITOR	CD110-25V-1000μF-M	PCS	2	C553.C601.	MAIN
102	17-00G470M-PO0	MINI ELEC.CAPACITOR	CD110-35V-47μF-M	PCS	1	C401.	MAIN
103	17-00G101M-PO0	MINI ELEC.CAPACITOR	CD110-35V-100μF-M	PCS	1	C304.	MAIN
104	17-00G471M-PO0	MINI ELEC.CAPACITOR	CD110-35V-470μF-M	PCS	1	C562	MAIN
105	17-00I47BM-PO0	MINI ELEC.CAPACITOR	CD110-50V-0.47μF-M	PCS	2	C705.C706	MAIN
106	17-00I10AM-PO0	MINI ELEC.CAPACITOR	CD110-50V-1μF-M	PCS	2	C203.C811.	MAIN
107	17-00I22AM-PO0	MINI ELEC.CAPACITOR	CD110-50V-2.2μF-M	PCS	2	C205.C211.	MAIN
108	17-00I47AM-PO0	MINI ELEC.CAPACITOR	CD110-50V-4.7μF-M	PCS	2	C216.C559.	MAIN
109	17-00Q100M-PO0	MINI ELEC.CAPACITOR	CD288H-250V-10μF-M	PCS	1	C402.	MAIN
110	17-00N47AM-PO0	MINI ELEC.CAPACITOR	CD288H-160V-4.7μF-M	PCS	1	C459.	MAIN
111	17-00N470M-PO0	MINI ELEC.CAPACITOR	CD288H-160V-47μF-M	PCS	2	C403.C561.	MAIN
112	17-00P101M-000	MINI ELEC.CAPACITOR	CD293-400V-100μF-M	PCS	1	C507.	MAIN
113	17-00I10AM-730	MINI ELEC.CAPACITOR	CD73-BP-50V-1uF-M	PCS	1	C458	MAIN
114	18-00K102K-PO0	INDUCTVE POLY.CAPACITOR	CL11-100V-102K（PEI）	PCS	2	C565.C565A	MAIN
115	18-00K222K-PO0	INDUCTVE POLY.CAPACITOR	CL11-100V-222K（PEI）	PCS	1	C301.	MAIN
116	18-00K472K-PO0	INDUCTVE POLY.CAPACITOR	CL11-100V-472K（PEI）	PCS	1	C206.C214.C522.	MAIN
117	18-00K153K-PO0	INDUCTVE POLY.CAPACITOR	CL11-100V-153K（PEI）	PCS	1	C518A.	MAIN
118	18-00K104K-PO0	INDUCTVE POLY.CAPACITOR	CL11-100V-104K（PEI）	PCS	7	C204.C217.C302.C303.C514.C707.C806	MAIN
119	18-00K224K-PO0	INDUCTVE POLY.CAPACITOR	CL11-100V-224K（PEI）	PCS	2	C202.C224.	MAIN
120	18-21X153K-7L5	METALIZED POLY.CAPACITOR	CL21X-100V-153K（MPE）	PCS	1	C509.	MAIN
121	18-21X104K-PO0	METALIZED POLY.CAPACITOR	CL21X-100V-104K（MPE）	PCS	1	C212	MAIN
122	18-21X394K-7L5	METALIZED POLY.CAPACITOR	CBB21-400V-0.39μF-K	PCS	1	C460.	MAIN
123	18-81U912J-L20	METALIZED POLY.CAPACITOR	CBB81-1.6KV-912J（PPS）	PCS	1	C456.	MAIN
124	18-0AN104M-L15	METALIZED POLY.CAPACITOR	CBB23A/CIS-275VAC-104K(X2)	PCS	1	C501.	MAIN
125	19-RHJ330J-P00	CERAMIC CAPACITOR	CC1-RH-63V-33pF-J	PCS	2	C710.C711.	MAIN
126	19-2B4561J-P00	CERAMIC CAPACITOR	CC1-2B4-63V-220pF-K	PCS	3	C486.C702.C111	MAIN
127	19-2B4561J-P00	CERAMIC CAPACITOR	CC1-2B4-63V-330pF-K	PCS	3	C911.C921.C931.	MAIN
128	19-2B4561J-P00	CERAMIC CAPACITOR	CC1-2B4-63V-560pF-K	PCS	1	C225.	MAIN
129	19-2B4821J-P00	CERAMIC CAPACITOR	CC1-2B4-63V-820pF-K	PCS	1	C215.	MAIN
130	19-2BJ102K-P00	CERAMIC CAPACITOR	CC1-2B4-63V-1000pF-K	PCS	5	C207.C208.C483.C484.R216	MAIN
131	19-2BJ222K-P00	CERAMIC CAPACITOR	CC1-2B4-63V-2200pF-K	PCS	1	C223.	MAIN
132	19-2BJ332K-P00	CERAMIC CAPACITOR	CC1-2B4-63V-3300pF-K	PCS	1	C210.	MAIN
133	19-2BJ103Z-P00	CERAMIC CAPACITOR	CC1-2B4-63V-0.01μF-Z	PCS	13	C105.C107.C209.C110.C112.C221.C556.	MAIN
						C568.C616.C709.C717.C718.C714.C703	MAIN
134	19-2BJ104Z-P00	CERAMIC CAPACITOR	CC1-2B4-63V-0.1μF-Z	PCS	1	C712	MAIN

NO.	PART NO.	NAME	SPECIFICATION	UNIT	QTY	PART PLACE	BOARD PLACE
135	19-2BR102K-P00	CERAMIC CAPACITOR	CT81-2B-500V-1000pF-K	PCS	1	C451.C504.C506.	MAIN
136	19-2BR392K-7L5	CERAMIC CAPACITOR	CT81-2B-500V-3900pF-K	PCS	1	C452.	MAIN
137	19-2BR392K-7L5	CERAMIC CAPACITOR	CT81-2B-500V-4700pF-K	PCS	1	C482.	MAIN
138	19-2BV471K-7L5	CERAMIC CAPACITOR	CT81-2B-1KV-470pF-K	PCS	2	C404.C552.	MAIN
139	19-2BV102K-7L5	CERAMIC CAPACITOR	CT81-2B-1KV-1000pF-K	PCS	2	C511	MAIN
140	19-2BV471K-7L5	CERAMIC CAPACITOR	CT81-2B-2KV-470pF-K	PCS	1	C513	MAIN
141	19-2BV681K-7L5	CERAMIC CAPACITOR	CT81-2B-2KV-680pF-K	PCS	2	C521.	MAIN
142	19-2BV102K-7L5	CERAMIC CAPACITOR	CT81-2B-2KV-1000pF-K	PCS	1	C943.	CRT
143	19-ACP222M-L10	CERAMIC CAPACITOR	CT7-2E4-400VAC-2200PF-M	PCS	1	C518.	MAIN
144	20-30712AK-P52	INDUCTOR WITH COLOR CIDES	LGA0307-1.2μH-K	PCS	1	L101.	MAIN
145	20-307100K-P52	INDUCTOR WITH COLOR CIDES	LGA0307-10μH-K	PCS	4	L201.L203.L701.L702.L703.	MAIN
146	20-307330K-P52	INDUCTOR WITH COLOR CIDES	LGA0307-22μH-K	PCS	1	L901.	CRT
147	20-41068AK-P53	INDUCTOR WITH COLOR CIDES	LGA0307-6.8μH-K	PCS	1	L202.	MAIN
148	20-000T55M-P00	FILTER	X5.5B	PCS	1	Z202.	MAIN
149	20-000T65M-P00	FILTER	X6.5B	PCS	1	Z203.	MAIN
150	21-YDD37UH-000	HORIZONTAL LINEARITY COIL	YDD-37μH	PCS	1	L441.	MAIN
151	21-YDDUF16-000	POWER FILTER TRANSFORMER	JLF-98-UF16/YDDUF16	PCS	1	L501.	MAIN
152	21-DDUU105-000	HORIZONTAL DRIVE TRANSFORMER	YDD-UU10.5	PCS	1	T451.	MAIN
153	21-YBC1950-A00	SWITCHING POWER TRANSFORMER	YBC40-28/1950A	PCS	1	T501.	MAIN
154	22-000012M-000	QUARTZ	12MHz	PCS	1	G701.	MAIN
155	22-LBN389H-000	IF FILTER	KDV-F38.9H/LBN38.9H	PCS	1	Z101	MAIN
156	23-1N4014K-000	FLYBACK TRANSFORMER	BSC24-01N4014K	PCS	1	T401.	MAIN
157	24-05053V8-000	TUNER	EWE-5053-V8/EWE-1053-V3	PCS	1	A101	MAIN
158	25-00V2141-000	AV TIP JACK	AV2-14-1	PCS	1	XS801.	MAIN
159	25-GZS2108-000	SOCKET	GZ10-2-108	PCS	1	XS902.	CRT
160	25-H7100D1-000	ERTH CONNECTOR	CH7-10-1DY	PCS	1	K9N.	CRT
161	25-H7100D2-000	ERTH CONNECTOR	CH7-10-2DY	PCS	2	XS501.XS502.	MAIN
162	25-CH655D0-000	ERTH CONNECTOR	CH6-5-5DY	PCS	1	XS402.	MAIN
163	25-CH655D0-000	ERTH CONNECTOR	CH6-5-5DY	PCS	1	XS404.	MAIN
164	25-5B025D2-000	CONNECTOR	CH5B-2.5-2DY	PCS	4	XS602.XS603.XS702.XS803	MAIN
165	25-5B025D3-000	CONNECTOR	CH5B-2.5-3DY	PCS	1	XS804	MAIN
166	25-5B025D4-000	CONNECTOR	CH5B-2.5-4DY	PCS	3	XS403.XS701.XS703	MAIN
167	25-5B025D5-000	CONNECTOR	CH5B-2.5-5DY	PCS	1	XS201	MAIN
168	25-00BXGJ1-000	FUSE BRACKET	BXGJ-1	PCS	2	FU501	MAIN
169	26-94DY450-000	4PIN CONNECTOR	CH9-2.5-4DY-450-CH5B	PCS	1	XP902.	CRT
170	26-95DY500-000	5PIN CONNECTOR	CH9-2.5-5DY-500-CH5B	PCS	1	XP901.	CRT
171	28-250V315-000	FUSE	250V-3.15A	PCS	1	FU501.	MAIN
172	29-PH22V10-000	MAIN PCB	KLX-PH22Z VER:1.0	PCS	1		MAIN

NO.	PART NO.	NAME	SPECIFICATION	UNIT	QTY	PART PLACE	BOARD PLACE
173		JUMPER	2.5mm	PCS	3	N801（12-13).N802（2-3).XS403	MAIN
174		JUMPER	5mm	PCS	3	W501.W811.C803	MAIN
175		JUMPER	7.5mm	PCS	30	W101.W102.W103.W202.W203.W204.W209	MAIN
						W301.W302.W503A.W508.W555.W601.W604.	MAIN
						W608.W701.W706.W708.W712.W713.W714.	MAIN
						R723. W813.W814.W815.R914.R924. R934.	MAIN
						N801(3-15)	MAIN
						W902.	CRT
176		JUMPER	10mm	PCS	17	W206.W504.W505.W509.W510.W553.W556.	MAIN
						W707.W807.W809.W810.W812.W904.R826	MAIN
						R511A.W513.W709	MAIN
177		JUMPER	12.5mm	PCS	9	W201.L301.W303.L505.W551.W702.W703.	MAIN
						W705.W706	MAIN
178		JUMPER	15mm	PCS	3	W602.D452.L403.	MAIN
179		JUMPER	20mm	PCS	2	W207	MAIN
Ⅱ、Frame							
1	32-0021MF3-000	HEAT SINK(POWER)	21MF3(1.35mm)	PCS	1	V513.	MAIN
2	32-0021HV3-000	HEAT SINK(IC.VERTICAL)	21HV3(1.5mm)	PCS	1	V451+N451	MAIN
3	32-21MMB1-100	HEAT SINK（17823）	21MMB1-1	PCS	1	N601.	MAIN
4	32-0007210-000	HEAT SINK（2012）	H=30mm	PCS	1	V563.	MAIN
Ⅲ、SCREW							
1	43-1103060-000	SCREW(POINTED)	TR 3×6 (acutilingual）	PCS	1	N601.	MAIN
2	43-1103080-000	SCREW(POINTED)	TR 3×8 (acutilingual）	PCS	1	N451.	MAIN
3	43-1103080-TAP	TAPPING SCREW	ST3×8	PCS	1	V563.	
4	43-1103102-000	SCREW FOR HEAT SINK	M3×10	PCS	2	V432.V513.	MAIN
5	43-7130000-000	NUT FOR HEAT SINK	M3	PCS	4	V432.N451.V513.N601.	MAIN
Ⅳ、Assistant material							
1	77-00FL001-000	HEAT CONDUCTION SILICON GREASE		PCS	5	V432.N451.V513.N601.V563.	MAIN
2	77-00FL002-000	RED GLUE		PCS	6	V432.N451.V513.N601.V563. RP551.	MAIN
3	77-00FL003-000	ANODE SILICON GREASE		PCS	1	CRT	MAIN

Additive BOM list

F01: Add double channel AV （AV port front three and back six） **NO.：BOM-KLX-PH22 VER 3.0-F01**

NO.	PART NO.	NAME	SPECIFICATION	UNIT	QTY	ADD PART PLACE	DELETE PART PLACE	BOARD PLACE
1		JUMPER	2.5mm		-2		N801（12-13).N802（2-3)	MAIN
2		JUMPER	5mm		-1		W811	MAIN
3		JUMPER	7.5mm		+1	R713.R714	N801(3-15).	MAIN
4		JUMPER	10mm		+1	W802.		MAIN
5		JUMPER	5mm		-1		C803	MAIN
6		JUMPER	20mm		+1	W803		MAIN
7	16-RTF101J-P52	CARBON FILM RESISTOR	RT14-1/6W-100Ω-J		+3	R217.R825.R810		MAIN
8	16-RTF102J-P52	CARBON FILM RESISTOR	RT14-1/6W-1KΩ-J		+3	R816.R822.R824.		MAIN
9	16-RTF222J-P52	CARBON FILM RESISTOR	RT14-1/6W-2.2KΩ-J		+1	R819.		MAIN
10	16-RTF332J-P52	CARBON FILM RESISTOR	RT14-1/6W-3.3KΩ-J		+2	R803.R804		MAIN
11	16-RTF103J-P52	CARBON FILM RESISTOR	RT14-1/6W-10KΩ-J		+1	R815		MAIN
12	16-RTF104J-P52	CARBON FILM RESISTOR	RT14-1/6W-100KΩ-J		+1	R821.		MAIN
13	19-2BJ103Z-P00	CERAMIC CAPACITOR	CC1-2B4-63V-0.01μF-Z		+1	R822		MAIN
14	17-00E100M-PO0	MINI ELEC.CAPACITOR	CD110-16V-10μF-M		+5	C218.C803.C815.C818.		MAIN
						C819		MAIN
15	17-00E470M-PO0	MINI ELEC.CAPACITOR	CD110-16V-47μF-M		+1	C805.		MAIN
16	17-00E471M-PO0	MINI ELEC.CAPACITOR	CD110-16V-470μF-M		+1	C821.		MAIN
17	17-00I10AM-PO0	MINI ELEC.CAPACITOR	CD110-50V-1μF-M		+1	C812		MAIN
18	11-2SC1815-P00	TRANSISTOR	2SC1815Y		+2	V802.V803.		MAIN
19	25-5B025D2-000	CONNECTOR	CH5B-2.5-2DY		-1		XS803	MAIN
20	25-5B025D3-000	CONNECTOR	CH5B-2.5-3DY		0	XS803	XS804 short L1.R1	MAIN
21	25-00V2141-000	AV TIP JACK	AV2-14-1		-1		XS801	MAIN
22	25-000V614-000	AV TIP JACK	AV6-14		+1	XS801		MAIN
23	10-04052BE-000	IC	HCF4052BE		+2	N801.N802		MAIN

F02: Add SCART（EURO）21Pin port **NO.：BOM-KLX-PH22 VER 3.0-F02**

NO.	PART NO.	NAME	SPECIFICATION	UNIT	QTY	ADD PART PLACE	DELETE PART PLACE	BOARD PLACE
1		JUMPER	7.5mm	PCS	+2	W805.W804.		MAIN
2	16-RTF101J-P52	CARBON FILM RESISTOR	RT13-1/6W-100Ω-J	PCS	+3	R806.R807.R808		MAIN
3	16-RTF823J-P52	CARBON FILM RESISTOR	RT14-1/6W-82KΩ-J	PCS	+2	R702.R703		MAIN
4	19-2BJ103Z-P00	CERAMIC CAPACITOR	CC1-2B4-63V-0.01μF-Z	PCS	+3	C807.C808.C809		MAIN
5	25-5B025D3-000	CONNECTOR	CH5B-2.5-3DY	PCS	+1	XS804		MAIN
6	25-5B025D4-000	CONNECTOR	CH5B-2.5-4DY	PCS	+1	XS805		MAIN
7	25-5B025D6-000	CONNECTOR	CH5B-2.5-6DY	PCS	+1	XS802		MAIN
9	43-1103102-000	SCREW FOR SCART BOARD	M3×10(Ni)	PCS	+2			SCART
10		SCART BOARD	KLX-PH.SCART	PCS	+1			SCART

F03: Add general EW Proofread **NO.：BOM-KLX-PH22 VER 3.0-F02**

NO.	PART NO.	NAME	SPECIFICATION	UNIT	QTY	ADD PART PLACE	DELETE PART PLACE	BOARD PLACE
1		JUMPER	15mm		-1		D452	MAIN
2	16-RTF102J-P52	CARBON FILM RESISTOR	RT14-1/6W-1KΩ-J		+1	R317		MAIN
3	16-RTF272J-P52	CARBON FILM RESISTOR	RT14-1/6W-2.7KΩ-J		+2	R321.R323.		MAIN
4	16-RTF472J-P52	CARBON FILM RESISTOR	RT14-1/6W-4.7KΩ-J		+1	R322		MAIN
5	16-RTF562J-P52	CARBON FILM RESISTOR	RT14-1/6W-5.6KΩ-J		+1	R318		MAIN
6	16-RTF822J-P52	CARBON FILM RESISTOR	RT14-1/6W-8.2KΩ-J		+1	R316		MAIN
7	16-RTF103J-P52	CARBON FILM RESISTOR	RT14-1/6W-10KΩ-J		+1	R312		MAIN
8	16-RTF183J-P52	CARBON FILM RESISTOR	RT14-1/6W-18KΩ-J		+1	R319		MAIN
9	16-RTF393J-P52	CARBON FILM RESISTOR	RT14-1/6W-39KΩ-J		+2	R311.R320		MAIN
10	16-RTF104J-P52	CARBON FILM RESISTOR	RT14-1/6W-100KΩ-J		+1	R313		MAIN
11	16-RTF274J-P52	CARBON FILM RESISTOR	RT14-1/6W-270KΩ-J		+1	R314		MAIN
12	16-RYI100J-P52	METAL OXIDE FILM RESISTOR	RY16-1W-10Ω-J		+2	R315.R445.		MAIN
13	17-00G470M-PO0	MINI ELEC.CAPACITOR	CD110-35V-47μF-M		+2	C315.C316		MAIN
14	17-00G471M-PO0	MINI ELEC.CAPACITOR	CD110-35V-470μF-M		+1	C314		MAIN
15	18-21X104K-PO0	METALIZED POLY.CAPACITOR	CL21X-100V-104K（MPE）		+2	C312.C311		MAIN
16	18-21Y473K-7L5	METALIZED POLY.CAPACITOR	CBB21-630V-0.047μF-J		+1	C457		MAIN
17	18-81U332J-L20	METALIZED POLY.CAPACITOR	CBB81-1.6KV-332J（PPS）		+1	C455		MAIN
18	17-00S47AM-PO0	MINI ELEC.CAPACITOR	CDS-50V-4.7μF-M		+1	C307		MAIN

NO.	PART NO.	NAME	SPECIFICATION	UNIT	QTY	ADD PART PLACE	DELETE PART PLACE	BOARD PLACE
19	12-0IN4148-P52	SWITCHING DIODE	1N4148		+1	D311		MAIN
20	12-00FR305-L15	SWITCHING DIODE	FR305(L15/H10)		+1	D452		MAIN
21	12-00FR309-L15	SWITCHING DIODE	FR309(L15/H10)		+1	D451		MAIN
22	11-2SA1015-P00	TRANSISTOR	2SA1015-O/Y		+1	V312		MAIN
23	11-2SC1815-P00	TRANSISTOR	2SC1815Y		+1	V311		MAIN
24	11-2SD2012-P00	TRANSISTOR	2SD2012		+1	V303		MAIN
25	21-00411UH-000	PROOFREAD COIL	YDD-410uH		+1	L311		MAIN
26	16-RW0103J-000	TRIMMER POTENTIOMETER	W206-2AL2KΩ		+1	VR312		MAIN
27	16-RW0503J-000	TRIMMER POTENTIOMETER	W206-2AL2KΩ		+1	VR311		MAIN
28	32-0000061-000	HEAT SINK(2SA940)	H=61mm		+1	V303		MAIN
29	43-1103080-000	SCREW(POINTED)	TR 3×8 (acutilingual)		+1	V303		MAIN

F04: Match the short CRT of 21" SUPER or SLIM **NO.：BOM-KLX-PH22 VER 3.0-F04**

NO.	PART NO.	NAME	SPECIFICATION	UNIT	QTY	ADD PART PLACE	DELETE PART PLACE	BOARD PLACE
		JUMPER	15mm	PCS	+1	R551.R552		MAIN
	16-RYI47BJ-P52	METAL OXIDE FILM RESISTOR	RY16-1W-0.47Ω-J	PCS	-2		R551.R552	MAIN
	16-RYI10AJ-L15	METAL OXIDE FILM RESISTOR	RY16-1W-1Ω-J(L15/H10)	PCS	+1	R304		MAIN
	16-RYI12AJ-L15	METAL OXIDE FILM RESISTOR	RY16-1W-1.2Ω-J(L15/H10)	PCS	-1		R304	MAIN
	16-RYI181J-P52	METAL OXIDE FILM RESISTOR	RY16-1W-180Ω-J	PCS	-1		R305	MAIN
	16-RYI471J-P52	METAL OXIDE FILM RESISTOR	RY16-1W-470Ω-J	PCS	+1	R305		MAIN
	16-RYJ15AJ-L20	METAL OXIDE FILM RESISTOR	RY21-2W-1.5Ω-J	PCS	-1		R451	MAIN
	16-RYJ22AJ-L20	METAL OXIDE FILM RESISTOR	RY21-2W-2.2Ω-J	PCS	+1	R451		MAIN
	18-21X364K-7L5	METALIZED POLY.CAPACITOR	CBB21-400V-0.36μF-K	PCS	+1	C460		MAIN
	18-21X394K-7L5	METALIZED POLY.CAPACITOR	CBB21-400V-0.39μF-K	PCS	-1		C460	MAIN
	18-21Y333K-7L5	METALIZED POLY.CAPACITOR	CBB21-630V-0.033μF-J	PCS	+1	C457		MAIN
	18-21Y473K-7L5	METALIZED POLY.CAPACITOR	CBB21-630V-0.047μF-J	PCS	-1		C457	MAIN
	18-81U332J-L20	METALIZED POLY.CAPACITOR	CBB81-1.6KV-332J（PPS）	PCS	-1		C455	MAIN
	18-81U562J-L20	METALIZED POLY.CAPACITOR	CBB81-1.6KV-562J（PPS）	PCS	+2	C455.C456		MAIN
	18-81U472J-L20	METALIZED POLY.CAPACITOR	CBB81-1.6KV-472J（PPS）	PCS	+1	C453		MAIN
	18-81U912J-L20	METALIZED POLY.CAPACITOR	CBB81-1.6KV-912J（PPS）	PCS	-1		C456	MAIN
	17-00F471M-PO0	MINI ELEC.CAPACITOR	CD110-25V-470μF-M	PCS	-2		C305.C306	MAIN
	17-00F102M-PO0	MINI ELEC.CAPACITOR	CD110-25V-1000μF-M	PCS	+2	C305.C306		MAIN

NO.	PART NO.	NAME	SPECIFICATION	UNIT	QTY	ADD PART PLACE	DELETE PART PLACE	BOARD PLACE
	17-00N470M-PO0	MINI ELEC.CAPACITOR	CD288H-160V-47μF-M	PCS	-1		C561	MAIN
	17-00P101M-000	MINI ELEC.CAPACITOR	CD293-400V-100μF-M	PCS	+1	C561		MAIN
	17-00Q100M-PO0	MINI ELEC.CAPACITOR	CD288H-250V-10μF-M	PCS	-1		C402	MAIN
	17-00Q220M-PO0	MINI ELEC.CAPACITOR	CD288H-250V-22μF-M	PCS	+1	C402		MAIN
	18-00K104K-PO0	INDUCTVE POLY.CAPACITOR	CL11-100V-104K（PEI）	PCS	-1		C303	MAIN
	18-00K224K-PO0	INDUCTVE POLY.CAPACITOR	CL11-100V-224K（PEI）	PCS	+1	C303		MAIN
	10-0078040-000	IC	LA78040	PCS	-1		N451	MAIN
	10-008172A-000	IC	LA78040/STV8172A	PCS	+1	N451		MAIN
	12-0HER207-L15	SWITCHING DIODE	HER207(L15/H10)	PCS	-1		D551	MAIN
	12-0HER308-L15	SWITCHING DIODE	HER308(L15/H10)	PCS	+1	D551		MAIN
	11-2SD1651-C00	TRANSISTOR	2SD1651C	PCS	-1		V451	MAIN
	11-2SC5296-C00	TRANSISTOR	2SC5296	PCS	+1	V451		MAIN
	21-00411UH-000	PROOFREAD COIL	YDD-410uH	PCS	-1		L311	MAIN
NO.	PART NO.	NAME	SPECIFICATION	UNIT	QTY	ADD PART PLACE	DELETE PART PLACE	BOARD PLACE
	21-YDD37UH-000	HORIZONTAL LINEARITY COIL	YDD-37μH(SMALL)	PCS	-1	L441		MAIN
	21-YDD30UH-000	HORIZONTAL LINEARITY COIL	YDD-30uH-1(BIG)	PCS	+1		L441	MAIN
	21-DDUU105-000	HORIZONTAL DRIVE TRANSFORMER	YDD-UU10.5	PCS	-1		T451	MAIN
	21-YDDE119-000	HORIZONTAL DRIVE TRANSFORMER	YDD-E119	PCS	+1	T451		MAIN
	21-YBC1950-A00	SWITCHING POWER TRANSFORMER	YBC40-28/1950A	PCS	-1		T501	MAIN
	21-YBC2708-060	SWITCHING POWER TRANSFORMER	YBC40-28/2708	PCS	+1	T501		MAIN
	23-0T1010A-000	FLYBACK TRANSFORMER	BSC25-T1010A	PCS	-1		T401	MAIN
	23-00N0608-000	FLYBACK TRANSFORMER	BSC25-N0608	PCS	+1	T401		MAIN
	32-0021HV3-000	HEAT SINK(IC.VERTICAL)	21HV3(1.5mm)	PCS	-1		V451+N451	MAIN
	32-0021HV3-000	HEAT SINK(IC.VERTICAL)	21HV3(1.5mm,H=100mm)	PCS	+1	V451+N451		MAIN
	32-0000061-000	HEAT SINK(2SA940)	H=61mm	PCS	-1		V303	MAIN
	32-034SSHS-000	HEAT SINK(2SA940)	34SSHS	PCS	+1	V303		MAIN
	21-00211UH-000	PROOFREAD COIL	YDD-210uH	PCS	+1	R561		MAIN
	25-CH655D0-000	ERTH CONNECTOR	CH6-5-5DY	PCS	-1		XS404	MAIN
	25-CH655D0-000	ERTH CONNECTOR	CH6-5-4DY	PCS	+1	XS404		MAIN
	43-1104100-000	SCREW(POINTED)	TR 4×10 (acutilingual）	PCS	+2			MAIN

Horizontal linearity Proofread PCB:21HS-CD								
	29-2129V10-000	Horizontal linearity Proofread PCB	21HS-CD		+1			21HS-CD
		JUMPER	5mm		+1	W413		22HS-CD
		JUMPER	15mm		+1	W421		23HS-CD
	16-RTF202J-P52	CARBON FILM RESISTOR	RT13-1/6W-2KΩ-J		+1	R410		24HS-CD
	18-21X104K-7L5	METALIZED POLY.CAPACITOR	CBB21-400V-0.1μF-K		+1	C466		25HS-CD
	21-00411UH-000	PROOFREAD COIL	YDD-410uH		+1	L456		26HS-CD
	21-00211UH-000	PROOFREAD COIL	YDD-210uH		+1	L455		27HS-CD
	25-CH655D0-000	ERTH CONNECTOR	CH6-5-5DY		+1	XS405		28HS-CD
	26-75DY3PL-000	5PIN CONNECTOR	3P-L=120		+1	XS405(Black connect to "D"		29HS-CD
						White connect to "B"		30HS-CD
						Bule connect to "C"		31HS-CD